# DELAWARE WEATHERIZATION ASSISTANCE PROGRAM

# FIELD GUIDE

**State of Delaware Department of Natural Resources and Environmental Control**

## ACKNOWLEDGEMENT

This Field Guide was prepared by the staff of the Delaware Weatherization Assistance program, including, Traci Evans, Karen Forrest, Cheryl Gmuer , Brittany Klecan, Jerry Spaulding and Stacy Sylvester. In addition, the guide is heavily influenced by the good work of dozens of contractors and previous weatherization professionals in Delaware and around the country.

This Field Guide is Chapter 3 of the much larger Delaware WAP manual, available on line at: http://www.dnrec.delaware.gov/energy/Pages/portal.aspx

This Field Guide has been published as a separate document to be used as a source of reference and knowledge required for WAP professionals in the field. While field professionals need to be familiar with the Field Guide, a comprehensive understanding of the entire manual is recommended for everyone working in the program.

Both the Field Guide and the WAP Manual will continue to evolve, as policies and procedures are refined and advances in technology alter the tools and techniques we employ in weatherizing homes. WAP personnel are expected to maintain modifications to the Field Guide as changes occur within the program. These program updates will be posted to the website and also distributed to the Delaware WAP community.

Work performed in the Delaware Weatherization Program must be performed in accordance with the Nationally Recognized Standard Work Specifications for single family and mobile homes. https://sws.nrel.gov/

# Contents

# 3. FIELD GUIDE AND STANDARDS

This Chapter of the Delaware Weatherization Assistance Program (WAP) Manual shall serve as the Delaware WAP Field Guide – a tool for the Grantee, Subgrantee, and contractors to use as guidance in providing services in the field in alignment with the Delaware Standard Work Specifications.

WAP field work encompasses multiple service providers, from the Subgrantees who routinely interact with clients, to Energy Auditors, installation contractors, HVAC technicians, inspectors and monitors. Activities under the Program include client education, auditing, installation of actual weatherization measures like air sealing and insulation, HVAC inspection and repair and final inspections.

The Delaware Department of Natural Resources and Environmental Control (DNREC) is the Program Grantee and provides all of the standards, protocols, requirements and expectations for conducting field work within the Program. This Field Guide should be used in conjunction with the entire WAP Manual in order to understand the complete Program and to provide guidance for all individuals involved in the Program.

## 3.1 HEALTH AND SAFETY (SWS Section 2.0)

The primary objectives of the Delaware WAP are to conserve energy through the implementation of cost effective weatherization measures and to protect and preserve the health and safety of clients, their homes, and workers throughout the weatherization process.

With the more advanced diagnostics and installation techniques utilized in Delaware, it is increasingly necessary to take steps to insure that Program measures and associated work activities do not cause or exacerbate health and safety problems for clients. Program participants at all levels must work diligently to identify potential health and safety issues and take action to mitigate them, where appropriate. In some cases, weatherization efforts may need to be deferred until hazards are adequately addressed.

This chapter establishes technical requirements for identifying, preventing, and addressing health and safety issues from three perspectives:

- Occupant & dwelling health and safety issues
- Weatherization process health and safety
- Weatherization worker health and safety

Assignment of responsibility within the State and Subgrantee organizational structures for ensuring compliance with these standards, including training opportunities and sources and allocation of funding to carry out health and safety measures, is addressed within the Delaware WAP Manual.

### 3.1.1 Occupant & Dwelling Health and Safety Issues

Common health and safety problems related to weatherization include excess moisture, mold, poor indoor air quality, faulty or poorly operating combustion appliances, and electrical hazards that lead to injury and fire. Additional problems may be present in the dwelling as a result of structural deterioration and materials and methods used during construction and remodeling, including lead-based paints and asbestos in siding, pipe insulation, and attic/wall insulation. Unsanitary conditions, the presence of volatile organic compounds (VOC's), and pest infestation also expose a dwelling's occupants to health and safety risks. It is the Subgrantee's responsibility to provide documentation

of the Energy Auditor's health and safety assessment of the home. Additionally, the client provides information about health concerns of the home and the occupants at intake. This documentation, referred to as the Health and Safety Survey, must be contained in the client record file.

#### 3.1.1.1 Occupant Health

Each dwelling unit being considered for weatherization must be individually assessed by the Auditor to determine the presence of existing health and safety hazards to its clients.

Contractors and Energy Auditors shall take all reasonable precautions to consider the health concerns of each occupant in the home, the condition of the dwelling, and the possible effect of weatherization measures on any particular health or medical conditions of the occupants.

As part of the energy assessment, the Energy Auditor must communicate with the client to directly solicit concerns relative to the health and safety of the occupants of the dwelling. Specific questions auditors might ask could include, but should not be limited to:

- The number of occupants living in the dwelling
- The age of the occupants (specifically infants and elderly)
- Whether any occupants have breathing issues, asthma or allergies
- If occupants have any other health issues and whether they believe they are "home related"
- If any occupants have elevated blood lead levels

The Client Health and Safety Survey form(s) located in Appendix B must be completed by the Subgrantee and placed in the Clients file. If the home is ultimately deferred, the form should be kept with the deferral forms for that client and saved for the required three year period.

Occupants with breathing issues or allergies, and those displaying other obvious medical issues, should be educated about the weatherization process, materials used and cautioned about the potential risk as it relates to their circumstances. All medical conditions should be considered throughout the weatherization process.

If any occupants living in the dwelling to be weatherized have been diagnosed with an existing elevated blood lead level, then efforts should be made to eliminate any exposure to lead contaminants during the weatherization implementation process.

#### 3.1.1.2 Unvented Space Heaters

A dwelling utilizing a non-portable, combustible, unvented space heater as the primary or secondary heating source presents a serious health and safety hazard and cannot be weatherized until it is removed and/or replaced with a vented unit. The Delaware WAP policy regarding unvented heaters as a primary or secondary heating source must be explained to the client.

When a portable, combustible unvented space heater is present in a dwelling being considered for weatherization, the Energy Auditor must:

- Explain the consequences of using an unvented space heater as a secondary heat source to the client, and

- Provide the client with information describing the dangers of using an unvented combustion appliance (including cooking appliances) for heating.

When a secondary non-portable, combustible, unvented space heater exists within the thermal and pressure boundary, the unit needs to be removed as it presents a serious health and safety hazard. As it is not the primary heating source, there is no replacement. Where the unit is used to heat 25% or more of the home's overall dimension, replacement may be considered where no other heating source for that portion of the home is available. The Delaware WAP policy regarding unvented heaters as a primary heating source must be explained to the client. The client must agree in writing to the removal of the heater or the unit may be deferred.

For secondary non-portable, combustible, unvented space heater that is outside the thermal and pressure boundary, the client should be educated on potential safety hazards.

Disposal requirements for any unvented space heater removed from a unit will be specified on a case by case basis by the Subgrantee.

#### 3.1.1.3 Unsanitary Conditions

Unsanitary conditions, including raw sewage and pest infestation, are sometimes encountered. Such conditions represent a potential health and safety issue for a dwelling's occupants and must be brought to their attention. If existing sanitary conditions would endanger weatherization workers, or appear to violate any local health department regulations, then weatherization efforts should be deferred until such conditions are corrected and appropriate government agencies should also be notified of the issues. Client should be offered direction and guidance of available resources.

#### 3.1.1.4 Moisture and Fungal Growth (Mold)

Moisture and fungal growth (mold) can affect the health and safety of the client, especially occupants with asthma, allergies and other breathing-related issues. In addition, if left uncorrected, these conditions can lead to serious structural deterioration over time and can be further exacerbated by the implementation of weatherization measures.

All homes shall be inspected for moisture and mold problems including evaluation of:

- Sources of obvious water damage and mold;
- Evidence of excessive condensation on windows;
- Standing water in basements or crawl spaces, or evidence of periodic flooding;
- Basements and crawl spaces with unsealed dirt floors.
- Unvented clothes dryers; and, other unvented appliances.

If problems are evident, the client should be informed of the problem and instructed how the problem may be resolved. The client should also be informed of the health and safety aspects of the problem and any self-help solutions they can immediately perform to resolve the matter.

Where serious conditions currently exist, the client must be provided with written notification of these conditions and the potential impacts on their health and safety. If an existing moisture or mold problem is found, the Energy Auditor must determine if the problem can be fixed under the scope of weatherization or if the home should be deferred because of the severity of the problem.

#### 3.1.1.5 Ground Covers and Vapor Barriers

Installing ground covers and vapor barriers for mobile homes and homes with dirt crawl spaces in unconditioned spaces may be recommended as a health and safety measure to minimize moisture related issues in these dwellings. Ground covers have the added benefit of providing a more hospitable work environment under the home.

Whenever a home has a conditioned space with exposed soil, the exposed area must have 6 mil poly installed, taped and sealed at the seams, and directly connected to the sill plate.
Energy Auditors should make every effort to assess whether to repair an existing vapor barrier, unless the repair is deemed less cost effective than replacement.

The DWAP takes a "do no harm" approach to existing crawl spaces. In most cases the Energy Auditor will chose to minimize any work done in a crawl space that would change the existing environment (for more specific information see Section 3.8.5).

#### 3.1.1.6 Lead-Based Paint

About half of all homes built before 1978 have lead-based paint. When lead-based paint is disturbed during weatherization activities, lead dust can be created, potentially leading to lead poisoning for those who are exposed.

Clients and occupants of homes to be weatherized must be given notification regarding the potential hazards of lead-based paint and lead-based paint dust if the home was built prior to 1978. All homes constructed Pre-1978 must be tested for lead prior to conducting weatherization measures affecting any disturbance of painted surfaces. Contractors must submit proof of lead test results. See Appendix G for required lead safe forms for all homes constructed prior to 1978.

EPA's publication "Renovate Right: Important Lead Hazard Information for Families, Child Care Providers and Schools" must be given to the client and an adult occupant of any affected dwelling. An adult occupant must sign an acknowledgement after receiving the pamphlet. The pamphlet can also be sent by certified mail with receipt to be placed in the client file.

Lead-safe weatherization practices must be followed in all appropriate circumstances. Photographs must be taken in order to document that lead safe practices were properly addressed and the photographs must be included in the completed client file.

#### 3.1.1.7 Asbestos

Asbestos is a mineral fiber that was commonly used in a variety of building construction materials for thermal insulation and as a fire retardant. These asbestos-containing materials (ACMs) represent a potentially serious health risk to clients and weatherization workers if they are disturbed in any way that causes asbestos fibers to be released into the air. Asbestos on heating pipes, and in attic and wall insulation, is most prevalent in older dwellings.

If the condition of any asbestos in or on the home is deteriorated enough to pose an immediate safety problem to the client or weatherization workers, the Energy Auditor can defer services until the problem is addressed.

Asbestos - in siding, walls, ceilings, etc.
The Energy Auditor shall inspect the exterior wall surface and subsurface for asbestos siding during the original audit. If present, the auditor should inform the client that suspected asbestos siding is present and to not disturb it in any way. Only a certified professional service (inspector /auditor) may collect samples to prove that a material is not asbestos.

Removal of siding is not permitted unless conducted by a Certified Professional Service Firm (CPSF) and removal and re-installation is not an allowable expense under the Program. All precautions must be taken not to damage siding. Asbestos siding should never be cut or drilled. If removal and re-installation is not possible, the contractor may also insulate through the home's interior or bypass wall insulation as an energy conservation measure altogether.

Asbestos - in vermiculite
The Energy Auditor shall assess whether vermiculite is present. Only a Certified Professional Service Firm (CPSF) (inspector /auditor) may collect samples to prove that a material does not contain asbestos. All CPSF inspectors should have training required under the Asbestos Hazard Emergency Response Act of 1986 (AHERA).

When vermiculite is present take precautionary measures as if it contains asbestos. Do not do a blower door test in the home. Contractors should be careful to utilize personal protection equipment (PPE) while in attics or areas suspected to contain asbestos.

Encapsulation by an appropriately trained asbestos control professional is allowed.
Careful installation of batt insulation in attics containing vermiculite is permissible. Removal is not allowed under the WAP.

The Energy Auditor, if asbestos is present or suspected, should instruct the client not to disturb the suspected asbestos containing material.

Asbestos - on pipes, furnaces, other small covered surfaces
The Energy Auditor should assume asbestos is present in covering materials and clients should be instructed not to disturb suspected asbestos containing material. AHERA testing is allowed under the WAP and must be conducted by a CPSF. If the auditor suspects asbestos is or may become friable, then the contractor must utilize asbestos appropriate PPE.

Encapsulation is allowed, and must be conducted by an AHERA asbestos control professional and should be conducted prior to blower door testing. Removal may be allowed, and must be conducted by a licensed asbestos control professional, subject to the conditions of this section.

License Required
Any and all work on asbestos must be conducted by individuals or firms licensed or otherwise approved for such activities by the State of Delaware. Licensing information for the State may be obtained at: http://dfm.delaware.gov/envsrv/asbestos/.

Bids Required
Prior to conducting any asbestos work, the Subgrantee shall solicit and receive no less than two written bids from licensed asbestos contractors for the work being recommended by the Energy Auditor. The Subgrantee shall then choose the lowest bidder. In cases where projected costs exceed $1500, the Subgrantee shall furnish all written bids to the Grantee and seek written approval as well. Homes may be deferred due to the cost, difficulties in abatement or other instances specific to the circumstances, at the Grantee's sole discretion.

#### 3.1.1.8 Indoor Air Quality

Indoor pollution sources that release gases or particles into the air are the primary cause of indoor air quality problems in homes. There are many sources of pollutants responsible for poor indoor air quality including building materials and related volatile organic compounds (VOCs), combustion byproducts, cleaning and maintenance products, tobacco use, and cooking byproducts. Radon gas from subsurface soils may also be present inside of the home.

Inadequate ventilation can increase indoor air quality problems by not bringing in enough outdoor air to dilute pollutants, and by not carrying indoor pollutants out of the dwelling. Temperature and humidity levels can also impact concentrations of some pollutants such as mold spores.

Health effects of poor indoor air quality on a dwelling's occupants can be both immediate and long-term. Immediate effects include: irritation of eyes, nose and throat; headaches; dizziness; and fatigue. Long-term effects include: respiratory disease; heart disease; and cancer.

All homes should be evaluated for the potential for poor indoor air quality, including the potential impacts of weatherization measures on exacerbating poor indoor air quality. If an existing indoor air quality problem is found, the Energy Auditor must determine if the problem can be fixed under the scope of weatherization or if weatherization work should be deferred due to the severity of the problem.

The client and occupants should receive education about the causes of the existing indoor air quality problem, and what they can do to improve indoor air quality in their dwelling.

For additional guidance regarding indoor air quality issues, please refer to Section 3.1.2.2 of this document in reference to the ASHRAE 62.2 Standard.

#### 3.1.1.9 Other Hazards / Health and Safety Issues

Many dwellings being considered for weatherization may present unsafe structural, mechanical, or electrical conditions for both the client and weatherization workers. The Energy Auditor should identify these conditions to the maximum extent possible through the inspection process, and in discussions with the occupants.

Minor repairs to correct unsafe structural, mechanical or electrical conditions can be performed by the Delaware WAP when they are necessary to effectively weatherize a home. However, the Energy Auditor may have to defer weatherization work if more extensive repairs are necessary to ensure client or weatherization worker safety.

Incidental repair measures (IRM) performed within the Program must be ancillary to an energy conservation measure (ECM) or Health and Safety measure (HSM).

### 3.1.2 Weatherization Process Health and Safety

While weatherization measures effectively reduce energy consumption and costs to clients, the nature and effect of such measures require that care be taken during the performance of these to avoid unintended consequences.

#### 3.1.2.1 Moisture Control

Moisture and mold can seriously affect the health and safety of the client and weatherization workers. All dwellings shall be inspected for previous or existing moisture problems. Identifying and eliminating the sources of the moisture should be the first priority when a moisture problem is found. Give special attention to the following areas:

- Look for evidence of condensation on windows and walls indicated by stains or mold. Inspect closets, especially those that are connected to outside walls. Clothes may need to be moved or removed in order to inspect the walls.
- Check for any standing water, open sumps, open wells or "wet weather springs," dirt floors, water stains, and other moisture issues in basements
- Ask the client if laundry is hung to dry indoors during the winter months.
- Check for leaking water supply lines or waste pipes.
- If there is a high-efficiency heating system present, the condensate drain line should drain into an interior drain or to the exterior of the home.
- Inspect to determine if attic roof sheathing shows signs of mold.
- Inspect top plates of all walls and chase-ways while in the attic. Balloon frame type walls or bypasses, if left untreated, can move moisture from the basement or crawl space directly into the attic.
- Inspect the structure for the possibility of a "roof over." If a newer roof has been installed over an existing older roof, plumbing or exhaust vents must extend to the outside through the new roof.
- Repair or eliminate the source of the moisture problem in accordance with this field guide or standard work specifications (SWS).
- Gutters and/or downspouts not properly placed to drain water away from home.

Containment of the moisture repair work space is not necessary if the affected area is less than 10 square feet of surface area. Vacating people from spaces adjacent to the work area is not necessary, but is recommended when children less than 12 months old are in the house. Occupants suffering from any health conditions should be kept away from the area being cleaned or repaired.

Steps to be taken to alleviate moisture problems which include, but are not limited to:

- Repair or installation of bathroom and kitchen exhaust fans exhausted to the exterior.
- Installation of vapor barriers of six (6) mil poly under enclosed foundations or any dwelling with excessive dampness emanating from soil floors.
- Repair or installation of dryer vents properly vented to beyond the perimeter of the crawl space or basement.
- Installation of attic ventilation and crawl space ventilation, but only when appropriate.
- Installation of continually operating exhaust fans in extremely tight homes.
- Replacement of downspouts and/or gutter sections to divert moisture away from the dwelling.

Clothes dryers must always be vented to the outdoors. Mobile home dryer vents must be extended through the skirting to the outdoors. Dryer venting must be of rigid or flexible metal vent pipe. It is

not recommended to use more than two (2) 90-degree elbows in the vent system. Flexible metal vent pipe may be used if it does not exceed six feet in length. Solid vent pipe should not be installed with sheet metal screws or other intrusive fasteners that will collect lint (per NFPA 54). Insulation is not required on hard pipe dryer vents.

All weatherization work should be performed in a manner that does not contribute to the increase of any moisture or mold growth and, when performed properly, serves to alleviate many such conditions.

All gas powered dryers must be hard piped outside the pressure/thermal boundary, regardless if they are in working order or not.

#### 3.1.2.2 Mechanical Ventilation Systems (SWS Section 6.0)

Acceptable indoor air quality is a high priority for maintaining client health. All exhaust systems must be tested in accordance with ASHRAE 62.2 and should be made to terminate outside the dwelling by extending the ventilation duct through the roof or sidewall to the exterior. HVAC and other mechanical duct work installed in unconditioned spaces will require insulation.
The WAP has adopted the ASHRAE 62.2 ventilation standard. This National Ventilation Standard refers to single family, multifamily (up to three stories), and manufactured and modular buildings. The standard defines the roles of, and minimum requirements for, mechanical and natural ventilation systems and the building envelope intended to provide acceptable indoor air quality in low rise residential buildings.

As part of these standards, ASHRAE 62.2 requires that the control for the ventilation system be appropriately labeled as "Primary Ventilation System". These labels will be provided by the Weatherization Subgrantee. All ASHRAE 62.2 calculations should be performed using the Residential Energy Dynamics online calculation tool or other approved formulas designated by ASHRAE. http://www.residentialenergydynamics.com/REDCalcFree/Tools/ASHRAE6222013

Information on the ventilation design and/or ventilation systems installed and instructions on any required maintenance shall be provided to the owner and the occupant. Controls shall be labeled as to their function (unless that function is obvious such as toilet exhaust fan switches).

Standards outlined in ASHRAE 62.2 require working closely with clients in helping them understand what improvements have been made to their home. It is important that we impress upon owners/occupants that any tampering with or removing of ventilation equipment may have negative consequences on their homes indoor air quality or occupant health. Contractors and staff performing ASHRAE 62.2 ventilation installations and/or final inspections need to inform clients on improvements made to their home. The Energy Auditor must convey to clients the planned strategy to improve the indoor air quality of their home and how to maintain these systems. The disclaimer form must be signed by the client prior to installation.

An ASHRAE 62.2 Inspector Checklist must be filled out for every home. The purpose of this form is to ensure and attest to the fact that the Final Inspector has reviewed the home for compliance with the current ASHRAE 62.2 Standard.

Forms must be filled out for all units, whether or not any ASHRAE 62.2 improvements have been made, and copies maintained in the client file.

#### 3.1.2.2.1 Ventilation Systems, Intermittent Operation

- Ventilation systems that are intended for on-demand operation include kitchen fans and bathroom exhaust fans. These fans are intended for occasional use during cooking, baking, showering, and other times when moisture and odors are created by household activities.
- Mechanical ventilation installed in bathrooms should have a minimum 80 CFM Energy Star, ASHRAE approved exhaust fan exhausting to outside of the building. This fan should be operated by an on/off switch or mechanical ventilation control device.
- Mechanical ventilation in kitchens should have a minimum 100 CFM exhaust fan to remove odors and cooking gases, exhausting to outside of the building. It is required in the Delaware WAP that all gas ranges must have range hoods installed. If this cannot be achieved, installation of nearby mechanical ventilation is required in order to adequately vent the gas range.
- Energy Star rated exhaust fans should be used with appropriate consideration for noise levels (required to be 1 sone or less) and CFM rating for the square footage being vented.
- Controls should be installed in the same room as the fan, whenever possible.
- Mechanical ventilation system ductwork shall consist of galvanized metal, rigid aluminum, PVC, or aluminum flex duct. It is recommended that flex duct not be used in runs over six (6) feet in length without any dipping or sagging. All ductwork must have mastic or be sealed prior to adding insulation. The ductwork shall be extended through the roof or sidewall to the outside and shall be insulated to the current Energy code requirements. The insulation shall completely surround the pipe and be fastened using mechanical fasteners, zip ties or wire straps.

#### 3.1.2.2.2 Ventilation Systems, Continuous Operation

Continuous ventilation systems are required by ASHRAE 62.2 in homes that do not achieve the minimum ventilation standard. These systems are considered a Health and Safety measure in dwellings that receive substantial reductions in air leakage and, as a result, may develop moisture problems.

The Energy Auditor must complete calculations in order to ensure that the appropriate ventilation system is installed in order to provide the necessary air changes needed to meet the WAP's requirements.

Mechanical ventilation system ductwork shall consist of galvanized metal, rigid aluminum, PVC, or aluminum flex duct. It is recommended that flex duct not be used in runs over six (6) feet in length without any dipping or sagging. All ductwork must have mastic or be sealed prior to adding insulation. The ductwork shall be extended through the roof or sidewall to the outside and shall be insulated to the current Energy code requirements. The insulation shall completely surround the pipe and be fastened using zip ties or wire straps.

For continuously operated exhaust fans, controls may be by a push button switch, a separate on/off wall switch, or a remotely located switch. Controls should be installed in the same room as the fan, whenever possible

When installing a continuously operating exhaust fan, educating the client about its use is extremely important. The client should be informed about:

- The purpose(s) of the exhaust fan installation;

- The importance of operating the fan whenever the house is closed up, such as during the heating season and,
- The disadvantages of not operating the exhaust fan.

#### 3.1.2.2.3 Replacement of Existing Exhaust Fans

The Energy Auditor must test existing mechanical ventilation for flow. If deemed inoperable, the system may be replaced as required by the ASHRAE 62.2 Standards. Installation of controlled ventilation systems must not be duplicated in the same dwelling.

Mechanical ventilation system ductwork shall consist of galvanized metal, rigid aluminum, PVC, or aluminum flex duct. It is recommended that flex duct not be used in runs over six (6) feet in length without any dipping or sagging. All ductwork must have mastic or be sealed prior to adding insulation. The ductwork shall be extended through the roof or sidewall to the outside and shall be insulated to the current Energy code requirements. The insulation shall completely surround the pipe and be fastened using mechanical fasteners, zip ties or wire straps.

#### 3.1.2.2.4 Dryer Vents

1. Dryer exhaust vents must be directed outside the perimeter of all conditioned and unconditioned spaces Vent ducts must be made of solid metal or PVC material, not vinyl and cannot use screws as fasteners. Hose clamps or adhesive are the only appropriate fasteners for holding the piping together.

2. Flexible ducts may be used <u>only</u> when it is impossible to use solid material, and only between the dryer and the wall. Flexduct shall be made of flex-rigid material, not aluminum foil material.

3. Ensure that there are no traps (sags) in the vent hose to prevent condensation from occurring, blocking the air flow to the outside. The outside end of the vent duct must be capped with a self-closing vent cover.

4. Extensions greater than 30 feet in (equivalent) length may require mechanical assistance such as a booster fan.

### 3.1.2.3 Combustion Appliances and Combustion Gases

With the integration of blower door technology and dense pack sidewall insulation, houses are being sealed tighter than ever before. In accordance with the "house-as-a-system" approach to weatherization, the WAP recognizes that there can be existing indoor air quality conditions that may be intensified by current air sealing techniques.

Energy Auditors are required to carry an ambient CO meter while performing the energy analysis of the home.

The following health and safety measures must be performed on all combustion appliances of homes to be weatherized:

- Carbon monoxide (CO) test of undiluted flue gases on all vented combustion appliances. If a CO level above 100 ppm, as-measured, is found in the undiluted flue gas sample, corrective action must be taken to reduce the CO to acceptable levels. If readings are detected above the minimum levels, weatherization work should be deferred until the problem is corrected.
- Ambient air test for CO on gas cook stoves. If any ambient level of CO above 25 ppm is found, the source must be identified and the problem corrected.
- Gas leak detection test on all natural and LP gas appliances and supply lines. All gas leaks must be reported to the client. If a leak is detected inside the home the auditor will be authorized to have the leak repaired by a qualified source. Heating oil supply lines and components must also be checked for leaks, and repaired.
- Draft test on all vented natural gas, LP gas and oil appliances to ensure an adequate draft.
- Inspection of exhaust vent systems to ensure that the proper size and type of pipe is being used, the condition of the vent pipe is satisfactory, the clearance meets applicable codes, and the vent systems are unobstructed.
- Test for back draft and the potential for flue gasses to spill into the living space. Identify combustion air sources and make sure they are unobstructed and sufficient, as defined by NFPA code.

A combustion appliance zone (CAZ) test must be conducted at the end of each work day by the installation contractor to ensure that air sealing techniques and practices have not negatively impacted building safety. Procedures for CAZ testing are illustrated in Section 3.10.8.2.

#### 3.1.2.4 Lead-Safe Weatherization (LSW)

All homes constructed Pre-1978, must be tested for lead prior to conducting weatherization measures affecting any disturbance of painted surfaces.

Contractors shall assume all painted surfaces of appropriate size contain lead paint and take the necessary steps to comply with EPA's Renovation, Repair, and Painting (RRP) Program Rule (40 CFR 745). Contractors must submit proof of lead test results in accordance with EPA guidelines.

Weatherization professionals should be selective and take added precautions when performing work on dwellings where cases of documented lead poisoning have occurred. Additionally, they shall not weatherize homes where there is an extraordinary pre-existing lead-based paint hazard and there are no means to abate the hazard, including insufficient funds or insufficient training to properly address the hazard.

LSW includes weatherization worker protection, general LSW work practice standards, and lead dust containment standards. All weatherization activities carried out under the WAP must comply with EPA's RRP Rule (40 CFR 745) and DOE's WPN 8-6 and 11-6 Guidance.

There must be adequate documentation in the client file to demonstrate that LSW measures were performed when necessary (an example copy of the required form located in Appendix G). Documentation should include photos of the site and containment set up, as well as a listing of materials used and measures taken. Post work inspection must also certify that LSW procedures were used and properly implemented.

EPA's RRP containment is required by law in pre-1978 homes. Minor repair and maintenance activities involving less than six (6) square feet of interior painted surface per room or twenty (20)

square feet of exterior painted surface are generally exempt from the RRP Rule, except window replacement.

It is incumbent upon the contractor to know and comply with the Delaware RRP Program, and to have the required training and Delaware firm status.

Training requirements and the RRP Rule can be found at www.epa.gov/lead

#### 3.1.2.5 Asbestos

Weatherization activities have the potential to contact asbestos-containing materials (ACMs) that may be present in insulated duct systems, wall and ceiling insulation, textured surface coatings, and drywall. ACMs may also be present in exterior siding and in combustion gas flues.

Workers must be prepared to protect their health and safety by wearing proper clothing, eye and skin protection, and full-face respirators as specified in other sections of this standard, and as may be required by OSHA/NIOSH whenever ACMs are encountered.

Workers must not take any actions that will disturb, expose, release, or discharge any ACMs into the air through cutting, sanding, drilling, ripping, or moving/removing objects containing ACMs.

Workers shall thoroughly clean up all dust and debris generated as a result of weatherization activities. Use of HEPA filters in all vacuum equipment is required.

Refer to Section 3.1.1.7 for additional asbestos guidance.

#### 3.1.2.6 Fire Hazards

Weatherization professionals must check for adequate clearance of space heaters, furnaces, and vents from combustible materials. If the clearance is not sufficient, corrective action must be taken ensuring all applicable NFPA codes are followed.

Carbon monoxide and smoke alarms are to be installed on every floor of the dwelling, preferably close to any heating source and outside of bedrooms. Client education must be included to ensure they clearly understand how and when to change batteries and safely maintain the alarm(s).

Smoke alarms are to be present whenever the contractor works on any combustion appliance in the home.

As a minimum, smoke alarms should be installed on the same floor as any heating units, and on each floor of the unit near bedrooms, unless local building codes require more alarms (i.e. in each bedroom). All installations must be in accordance with manufacturer specifications.

Carbon monoxide (CO) alarms that display real-time CO levels should be installed at eye level on the same floor as any combustion appliance, and on each floor of the unit near bedrooms, unless local building codes require more alarms (i.e. in each bedroom). A combination CO/smoke alarm is also an option to install when appropriate.

Existing operational units, when found in homes, do not need to be replaced; however additional alarms may be placed where existing units are insufficient to meet the requirements above. If the auditor assesses that an existing alarm is past its useful life, the alarm should be replaced.

#### 3.1.2.7 Duct Cleaning and Sealing

Leaking ducts may cause pressure imbalances throughout a building. All accessible return air HVAC ducts should be sealed for energy efficiency and to prevent foreign particulates from entering and being blown into the conditioned space. Supply air ducts located outside of the thermal/pressure boundary or considered to be a significant source of wasted energy, should also be tested and sealed with mastic.

During weatherization work, ducts should be kept as clean as possible. The Contractor should clean the ducts around registers and replace furnace filters.

#### 3.1.2.8 Electrical Issues

Where live knob-and-tube wiring exists, the following conditions must be met in order to install attic insulation:

- Wiring insulation must be intact and complete with no exposed areas and connections.
- S-type fuses that match the size of the wiring must be installed if they do not already exist. Any modification of the electrical panel must have prior written permission from the client. The Subgrantee may wish to contract with a licensed electrician where questionable safety conditions exist.
- When installing cellulose or fiberglass in areas around knob-and-tube wiring, there must be a minimum of a three (3) inch clearance from the wiring. A dam must be constructed to prevent the possible drifting of insulation, which could result in contact with the wiring.
- The presence of knob-and-tube wiring, overloaded circuits, or live bare wires, will be allowable reasons for not insulating exterior walls. If the problems can be corrected within reasonable means, the walls may be insulated.
- Other standards related to electrical safety include:
- Junction boxes must be covered and their locations indicated with the use of flags or other markers before insulation is installed.
- Inspect the electrical wiring to determine type(s) of wiring present, its condition, routing, and circuit protection.

### 3.1.3 Weatherization Worker Health and Safety

#### 3.1.3.1 Contractor Responsibilities

Contractors that perform work within the WAP will meet the following requirements:

- Crew Leaders must possess and maintain OSHA-30 certification. All other crew members must complete an OSHA-10 certification course or receive on the job safety training documented by the Crew Leader.

- Contractors performing work in WAP are responsible to maintain compliance with OSHA's confined space requirements.
- Ensure that all field workers have access to and demonstrate the proper use, maintenance, and storage of all tools, equipment, and safety apparatus including fire extinguishers and first aid kits.
- Conduct scheduled safety meetings, and document meeting subject matter and attendance records. Safety meetings should be held semi-monthly. Subcontractors should determine the content of the meetings based on issues of current importance. It is recommended to limit each meeting to only one topic (e.g., ladder safety, OSHA Safety Data Sheets (SDS)) to help workers retain and understand the information covered. The content of meetings and attendance should be documented. It is recommended that workers be given brief post-tests on the addressed safety issue so that workers can demonstrate their knowledge and understanding of the topic.
- Provide all training and direction necessary to ensure that workers perform their tasks in a safe manner and in a safe working environment, and that they do not jeopardize the safety of others by their actions while on the job.

- Adhere to all safety regulations to maximize worker safety. Workers who are not following safety practices or not using safety equipment properly must be removed from the job site by the contractor until training or correction of the violation can be provided or demonstrated to the satisfaction of the Subgrantee. A report of all such enforcement activities must be included in a contractor's safety file.
- Ensure that each field worker has a respirator fitted in accordance with an OSHA/NIOSH-compliant qualitative respirator fit test. Qualitative fit tests should be given to each worker by the contractor every twelve (12) months. The test should be documented on the OSHA/NIOSH Qualitative Respirator Fit Test form.
- Ensure that each field worker has a spirometry test at least every eighteen (18) months, performed by a physician or respiratory therapist, to determine the worker's physical ability to wear a respirator and perform tasks while wearing it.
- Maintain an SDS record book describing each product being installed by weatherization workers. SDS information should be maintained in the contractor's office and in at least one (1) contractor job-site vehicle. Each worker must have access to the information in the SDS record book.
- Maintain, at the contractor's office and in each contractor job-site vehicle, a list of emergency phone numbers, and a list of all workers with their emergency contact information. The Health Insurance Portability and Accountability Act of 1996 (HIPAA) does not allow employers to keep medical information such as workers' allergies or medications.

#### 3.1.3.2 Contractor Safety Equipment

Safety equipment that the contractor should have on each job site as appropriate for the tasks scheduled to be performed includes, but is not limited to:

- Drinking water supply sufficient for the number of workers present on the job-site.
- Exhaust fans for the attic and crawl spaces/basements.
- Ladders of sufficient number and type needed to meet job requirements.
- Ladder levelers and stabilizers.
- Ground Fault Circuit Interrupters (GFCI).

- Extension cords of sufficient number and type needed to meet job requirements, each no less than twelve (12) gauge and all grounded.
- Double-insulated power tools.
- Trouble lights, three (3)-wire, grounded.
- Aerosol or other appropriate type insecticide for bees and wasps.
- Industrial size first aid kit suitable for weatherization tasks.
- Fire extinguishers rated for all potential types of fires – tested regularly.
- Flares or warning lights.
- Flashlights
- Grounding cable/rod for generator.

#### 3.1.3.3 Worker Personal Protective Equipment

Worker personal protection equipment should include, but not be limited to:

- Head Protection. Hard hats or bump caps should be provided to protect the worker from accidental head injury.
- Eye Protection. Goggles, plastic shields or safety glasses with side shields, should be worn by workers whenever there is a chance of particles flying into the eyes. Use the proper eye protection whenever drilling, blowing insulation, cutting glass or plastic, working with fiberglass, and sawing. Regular (non-safety) glasses or sunglasses are not approved eye protection.
- Hearing Protection. Suitable hearing protection should be worn by workers whenever they are exposed to noise levels exceeding OSHA allowable levels from machinery, tools, or installation processes.
- Gloves. Each worker should have access to good quality work gloves when needed. These will protect the hands while handling glass, fiberglass, aluminum, wood, and cellulose. Gloves with cuffs are recommended since they also protect the wrist.
- Shoes. Each worker should wear good quality work boots (or shoes) with a heavy, treaded sole that offers support, traction and protection. The uppers should be made of leather to protect the ankles and lower leg from scrapes and punctures. Athletic shoes and dress shoes do not give proper protection or support.
- Clothing. Protective apparel should be worn as required by the nature of the task to be performed by the worker. Workers must not wear clothing that could be loose enough to easily get caught on protruding objects or in machinery or power tools.

Respirators:

- Respirators are recommended when blowing cellulose or fiberglass insulation, and when installing fiberglass batt insulation. Dust from insulation is likely the most serious potential health hazard facing weatherization workers, and using the correct respirator is mandated whenever handling or installing insulation.
- Each worker exposed to insulation materials, dust, or fumes should have a fitted respirator. Workers should receive training on how to select, maintain, clean, and store their respirator. Any problems or malfunctions must be reported by the worker to their supervisor.
- When installing any type of insulation, a full-face respirator is recommended. Filters should meet specifications N 7500-8, approved by National Institute of Occupational Safety and Health (NIOSH) and Mine Safety and Health Administration (MSHA).

- Disposable dust mask respirators can also be used when full-face respirators cannot be worn. Contractors should use a NIOSH/MSHA approved respirator. Proper fitting is a necessity.

#### 3.1.3.4 Worker Practices – Asbestos

Weatherization workers are highly likely to encounter asbestos-containing materials (ACMs) when weatherizing older homes. ACMs may be present in insulated duct systems, wall and ceiling insulation, textured surface coatings, and drywall. ACMs may also be present in exterior siding and in combustion gas flues.

Workers must be prepared to protect their health and safety by wearing proper clothing, eye and skin protection, and full-face respirators as specified in other sections of this Standard, and as may be required by OSHA/NIOSH whenever ACMs are encountered.

Workers must not take any actions that will disturb, expose, release, or discharge any ACMs into the air through cutting, sanding, drilling, ripping, or moving/removing objects containing ACMs.

Workers shall thoroughly clean up all dust and debris generated as a result of weatherization activities. Use of HEPA filters in all vacuum equipment is required.

For additional information regarding asbestos, refer to 3.1.2.5.

#### 3.1.3.5 Worker Practices – Lead-Based Paint

Weatherization workers are likely to encounter lead-based paint in homes built before 1978. Workers must therefore be prepared to protect their health and safety by wearing proper clothing, eye and skin protection, and full-face respirators as specified in other sections of this Standard, and as may be required by OSHA/NIOSH whenever lead-based materials are encountered.

All workers must undergo Lead Safe Weatherization Practices training before undertaking any work where lead-based paint may be encountered.

Workers must not take any actions that will disturb, expose, release, or discharge any lead-containing paint, dust, dirt, or debris unless they have been trained in lead-safe repair practices.

Workers shall thoroughly clean up all dust and debris generated as a result of lead-safe repair practices. Use of HEPA filters in all vacuum equipment is required.
For additional information regarding Lead Based Paint, refer to 3.1.1.6.

#### 3.1.3.6 Worker Practices – Electrical Safety

All of the following practices and procedures are generally accepted safety practices and should be observed by workers at all times.

- All switch boxes, junction boxes, wires, and conduits should be properly covered or closed.
- Wire and cords that are defective, inadequate, worn, frayed, wet, oily, or have deteriorated insulation should be replaced.

- Defective switches, receptacles, extension cords, lamp sockets, tools, or equipment should be repaired immediately or properly marked and made inoperable.
- All stationary and portable electrical tools should be properly connected and grounded according to manufacturer's specifications (except double-insulated tools).
- Ground Fault Circuit Interrupters (GFCIs) must be used with all electrical equipment and power tools.
- Broken housings and loose or vibrating machine parts should be replaced before equipment is used.
- Electrical panels, switch boxes, motors and other electrical equipment should never be cleaned with water or dangerous solvents.
- All equipment or circuits being worked on or repaired should be locked out or otherwise de-energized and tagged.
- All installation or extension of electrical facilities should comply with applicable sections of the National Electrical Code.
- Only heavy-duty, grounded extension cords designed for industrial services should be used.
- Extension cords should never be used to operate stationary equipment or other permanent operations.
- Clearance of thirty (30) inches and clear access should be maintained around all electrical panels.
- Work practices which overload motors, insulation, wires, or electrical accessories, must be avoided.

#### 3.1.3.7 Worker Practices - Electric Generator Safety

- Portable generators, rather than the client's home electrical supply, should ordinarily be used on the job site.
- Generators should be grounded with a ground rod driven into the ground.
- Generators must not be used in any enclosed area, or an enclosed truck or van.
- Exhaust from generators must always be released to the outdoors and away from the home.

#### 3.1.3.8 Worker Practices - Hot Weather Precautions

If proper precautions are taken, the vast majority of heat problems can be avoided. The following practices should be followed:

- When working in high temperatures, drink large quantities of cool water. Eat light, easily-digestible foods.
- Whenever possible, workers should take turns when installing insulation in a hot attic. Workers should not spend more than fifteen (15) to twenty (20) minutes at a time in a hot attic. If dizziness occurs, get out of the attic immediately and cool the body down.
- Workers should not work alone in a hot attic. This allows for a quicker response to heat-related problems.
- Plenty of cool water and salt tablets (for those permitted to take them) are the best ways to prevent heat-related problems.
- Be sure that work in an unvented attic does not begin until the vent openings are cut. It is suggested that each crew have an electric fan to aid in the ventilation of the attic.

- Familiarize yourself with the symptoms, prevention, and treatment of heat stroke, heat exhaustion, and heat cramps. Be alert to these symptoms among workers on the job-site, and be ready to provide relief or alert emergency medical services, if required.
- Mandated protective equipment such as hard hats, goggles, respirators, and long sleeve shirts, although uncomfortable, should be worn while insulating work is being done to prevent possible short and long-term problems to the eyes, skin and lungs.

#### 3.1.3.9 Worker Practices - Cold Weather Precautions

The following are recommended cold weather practices and precautions:

- Proper clothing is extremely important in the winter. Crew members should be supplied hard hat liners and two sets of warm winter gloves. They should also be encouraged to use insulated boots with a non-slip tread.
- For warmth, several layers of light clothing are recommended instead of thick bulky clothing, to allow for freer movement.
- All crew members should be made aware that strenuous work for long periods of time is dangerous because of the effects of cold temperatures on workers' perception of exhaustion. Work should be done in short intervals to prevent exposure and overtiring.
- Trips in and out of the house should be kept to a minimum to prevent cooling of the dwelling unit, exposing the client to the cold, and tracking snow and mud into the dwelling.
- Power tools should be used with extreme caution due to the possibility of electrical shock caused by wet feet, wet ground, and bad footing.
- Blower machines should be protected from the weather by elevating them on blocks, placing them on dry plywood or lumber, or placing them in a dry covered area (e.g., porch, step van, garage, etc.).
- All tools and equipment with motors should be warmed up prior to use.
- Care should be taken in the placement of extension and power cords.
- Exercise extreme caution and sound judgment concerning ladder work on extremely windy days.
- Be especially aware of the symptoms, prevention, and treatment of frostbite and hypothermia. Be alert to these symptoms among workers on the job-site, and be ready to provide relief or alert emergency medical services, if required.

#### 3.1.3.10 Worker Practices - Fire Safety

The following safety practices are critical to prevent the risk of fire.

- Provide and properly mount approved fire extinguishers in contractor job-site vehicles. Multi-purpose dry chemical units are most effective for general use, but dry chemicals can damage delicate electrical equipment. Gas-type extinguishers eliminate that problem. Halon 1211 is more effective and less costly than $CO_2$ for extinguishing electrical fires.
- Inspect and test fire extinguishers at regular intervals to ascertain that they are fully charged and in proper working condition.
- Workers must be familiar with the location and the proper use of fire extinguishers and other firefighting equipment.
- Smoking is not permitted in proximity to fuel sources or in the client's home.

- Segregate oxidizers and oily materials in storage.
- Use only UL listed waste containers for oily and paint-soaked rags. It is a good policy to place waste with spontaneous combustion potential in water-filled containers.

When storing flammable liquids at the job-site, observe the following:

- Limit supply to small amounts. Keep flammable liquids on hand only if absolutely necessary.
- Store flammables properly in airtight metal cans and in well-ventilated areas. Make sure all containers are labeled. Dispose of them safely in metal containers with tight lids. Discard them as soon as possible.
- Clean up spills or leaks promptly.
- Never smoke around flammable liquids. Even a tiny spark or ash can cause a fire or explosion.

#### 3.1.3.11 Worker Practices - Power Tool Safety

- A properly-grounded Ground Fault Circuit Interrupter (GFCI) should be used.
- Be sure that all workers remove jewelry, eliminate loose clothing, and confine long hair.
- Be sure there is enough natural and/or artificial light to do the job safely.
- Keep all safety guards in position and wear protective equipment. Eye protection is required when flying debris of any kind is anticipated.
- Be sure to use grounded plugs or double-insulated power tools.
- When cords become damaged, they should be replaced.
- Never operate power tools unless you are thoroughly familiar with the controls and operations. When in doubt, consult someone who is familiar with them.
- All power tools should be carefully inspected regularly. Look for frayed or bare wires, dirt and dust in the tool, and a tight connection between the cord and the tool.
- Make sure that the power tool's blade or bit is tightly clamped to the chuck.
- Make sure that the power switch on the tool is off before connecting it to the power source.
- Do not operate power tools with dull blades and bits. This can result in serious injury and lessen the life of the power tool.
- Do not distract any worker using a power tool.
- Never try to clear jammed power tools until you disconnect the power source.
- When using an extension cord, always plug the tool into the extension cord before the extension cord is connected to the power source. Break the connection between the extension cord and the power source before disconnecting the tool from the extension cord. The tool cord and extension cord should generally not be longer than 25 feet each to guard against overheating.
- Be sure that power cords do not come in contact with sharp objects.
- Cords should be checked often to detect overheating. If a cord is uncomfortably warm, immediately disconnect it and arrange for an inspection by a qualified person.
- Make sure that the location of cords on the job-site does not interfere with other workers.
- Electricity must be regarded with respect and handled properly. If there is water in the area extreme caution must be observed. Water will greatly increase the chance of grounding and shock.
- Workers should always report any shock received from electrical equipment no matter how minor the shock might be. Minor shocks can lead to fatal shocks.

#### 3.1.3.12 Worker Practices - Hand Tool Safety

The inherent safety of hand tools is sometimes taken for granted. But because they are used more often than power tools and equipment, and are frequently used in applications for which they were not designed, they are the source of most accidental injuries on job-sites. The following are safety practices concerning the use of hand tools:

- Establish regular tool inspection procedures to ensure that hand tools are maintained in a safe condition. Dull blades, broken screwdriver blades, cracked handles or loose heads can cause injuries.
- Use good quality tools.
- Do not put sharp objects or tools in pockets of clothes. This could result in being stabbed or cut.
- Always use the proper tool for the job.

#### 3.1.3.13 Worker Practices - Ladder Safety

The following safety practices are particularly critical due to the potential of serious injury when working with ladders.

- Ladder levelers and stabilizers should be used on all straight and extension ladders.
- Regular inspection of ladders is required in order to find bends and cracks that could weaken the ladder.
- Regularly check the shoes at the bottom of the ladder to see that they are intact and secure.
- Ladders should not be placed on boxes, barrels, or other unsuitable bases to obtain additional height.
- Ladders are to be stored horizontally on the floor or ground, or on supports to prevent sagging.
- Ladder rungs are to be kept in a non-slippery condition.
- Follow the "Rule of Ten": Keep ladders at least ten feet from all power lines.
- Set the base of the ladder out one foot from the house for every four feet up.
- No ladder should be used to gain access to a roof or any other elevated position unless the top of the ladder extends at least three (3) feet above the point of support.
- Make sure the parts of the extension ladders overlap by at least two (2) rungs.
- Have another worker hold the ladder if the ladder is extended over half of its closed length or there is a question as to its stability.
- Be sure that shoes are not greasy, muddy or slippery before climbing.
- Always face the ladder when climbing up or climbing down.
- Do not climb higher than the third rung from the top on straight or extension ladders.
- Do not climb higher than the second tread from the top on stepladders.
- Never drop a ladder; dents and stress can weaken it.

#### 3.1.3.14 Worker Practices - Safety Around Pests

Wasps and Bees

- If a worker is allergic to wasp or bee stings, he or she should take the necessary precautions, and acquire an anti-venom kit and have it with them at all times while on the job. It is possible that a person may not know that they are allergic to bee stings. The symptoms of an allergic reaction are faintness, nausea, and/or shortness of breath. If a person is experiencing these symptoms, seek professional medical help immediately.
- If a dwelling is known to have a wasp or bee problem, plan to address the issue well in advance of the start of weatherization work. This will allow the attic or crawl space to air out and prevent unnecessary inhalation of insecticides.

Rodents

- If rodents or indications of an active rodent infestation are observed, the client or landlord should be told to remove any rodent harborage within one hundred (100) feet of the dwelling unit.
- Contact with rodent droppings can spread infectious diseases. A disinfectant towelette and/or alcohol-based hand sanitizer should be used whenever workers contact rodents or their droppings.
- If a rodent bites someone, medical attention should be sought immediately.
- If the rodent infestation is particularly serious, notify the appropriate authorities.

Bats

- To remove bats from a dwelling, first tightly close any large openings and then caulk, pack, or cover with galvanized mesh all but the opening they use most; then wait until all the bats have left the attic and close the hole.
- Dried droppings are the major source of contamination from bats. When working around the droppings an aseptic mask should be worn and skin contact with droppings should be avoided by wearing rubber gloves. Wearing goggles can prevent contact through the eyes. If bats are present, gloves and heavy clothes should be worn to prevent possible bites.
- Bat bites are rare; however, if a crew member is bitten, a physician should treat them. An effort should also be made to obtain the bat that caused the bite.
- If the infestation is particularly serious, notify the local health department.

Snakes

- To eliminate snakes, eliminate harborage such as lumber piles, rock piles, and debris under porches and house.
- When working where the presence of snakes is a possibility, wear protective leg and foot covering and heavy gloves.
- If a poisonous snake bites a person they should be transported to a medical facility at once.

#### 3.1.3.15 Worker Practices – Personal Safety

Clients that are unruly, belligerent, or threatening to the personal safety of the weatherization worker, such unit shall be immediately deferred. Subcontractors and staff should immediately walk away from any situation where they sense their health and safety at all threatened. They should also not hesitate to involve local law enforcement officials in such situations.

## 3.2 WEATHERIZATION PRIORITY LISTS

The Delaware WAP uses the approved Delaware Priority List which specifies standard measures to be undertaken in a home and the order in which the measures are taken. The measures with higher priority are to be installed before or instead of measures lower on the list. Funds for an individual unit are budgeted for the highest priorities down to lower ones, until funds are depleted, within the boundaries of the average cost per unit.

Measures with higher priority may only be skipped if they present insurmountable problems in terms of health, safety or building durability. The Energy Auditor must note any variation from the prescribed order of priority. The Subgrantee must review and approve such variations when formulating or approving the final Work Order for the unit. Any recommended energy efficiency measure that is not on the Delaware Priority List requires a SIR calculation > 1 by the Energy Auditor to justify inclusion on the Work Order for installation. (This calculation is derived from a DOE approved software modeling tool.)

The WAP has two Priority Lists approved by DOE for use in energy audits: The Single Family Homes Priority List and the Mobile Home Priority List which are provided in Appendix F.

## 3.3 DEFERRAL POLICY

The WAP may elect to defer a home from receiving weatherization services where health and safety hazards exist for our staff, contractors or our clients or where conditions prevent the safe and effective emplacement of weatherization measures.

### 3.3.1 Causes for Deferral

Conditions which may cause a home to be deferred, when they cannot be resolved prior to or as a part of weatherization services as defined in this guidance, may include, but are not limited to the following:

- Structurally unsound dwellings.
- Evidence of substantial, persistent infestations of rodents, insects and other vermin.
- Electrical or plumbing hazards
- The presence of sewage in any part of the dwelling unit, basement or crawl space.
- Environmental hazards such as serious moisture problems, carbon monoxide, gas leaks, friable asbestos or other hazardous materials
- Substantial amounts of standing water in the crawl space or basement.
- The presence of animal feces in any area of the dwelling unit where Program staff must perform weatherization measures.
- Excessive garbage build-up in and around the dwelling unit which limits the Program staff's access to the dwelling and encourages rodent infestations.

- Ventilation cannot be accomplished in the home to comply with ASHRAE 62.2 standards and/or provide minimal adequate ventilation for the safety of the occupants.

In addition to health and safety hazards, other issues may prevent a home from being weatherized. These include:

- Major remodeling is in progress which limits the proper completion of major weatherization measures.
- Uncooperative client: client refuses major weatherization measures or refuses to make modifications necessary to permit major measures from being completed.
- Maintenance and housekeeping practices (hoarding) that are negligent to the point of limiting the access of Program staff to the dwelling, or creating an unwholesome working environment.
- An overt threat of violence to any Program staff member or any household member during the weatherization process.
- The presence and/or use of any controlled substance in the dwelling unit during the weatherization process.
- Needed incidental repairs will exceed $400 in total costs

### 3.3.2 Deferrals at Beginning of Audit

The auditor should first perform the health and safety assessment to determine if weatherization can continue prior to performing the energy audit. If an auditor arrives at a home, begins to review the home and determines it should be deferred prior to concluding the audit, the auditor shall immediately contact the Subgrantee by cell phone to describe the situation and ask for guidance. The auditor should continue with and complete the health and safety assessment, but shall not begin the energy audit if deferral is likely. If possible, the Subgrantee representative may want to meet the auditor in the field to discuss the situation further and brainstorm ideas for getting the home in a condition where an audit can be conducted. No home may be deferred without first having checked with the Subgrantee.

If it is finally decided to defer the home, the Subgrantee shall inform the homeowner that the home is being deferred. Documentation of the homeowners understanding why the home is deferred must be kept on file, stating the reason(s) why the home is deferred. The Subgrantee should make efforts to provide the homeowner with resources needed to correct the situation. If alternate funding can be coordinated to address the health and safety hazard within 60 days of the initial assessment, the work can be delayed and the audit performed once alternate funds are approved.

### 3.3.3 Deferrals During Audit

If in the auditor's judgment during the audit, he/she feels the house should be deferred for a problem likely and/or easily fixed - and that the home will eventually be weatherized, the

audit may continue, however, the auditor shall immediately contact the Subgrantee by cell phone to describe the situation and ask for guidance. If possible, the Subgrantee representative may want to meet the auditor in the field to discuss the situation further and brainstorm ideas for getting the home in a condition where a deferral may not be necessary. No home may be deferred without first having checked with the Subgrantee.

If it is finally decided to defer the home, the auditor shall have the homeowner sign the deferral form, noting all reasons for deferral. The Subgrantee should then be immediately notified and try to get the homeowner any help or resources needed to correct the situation. The completed audit shall be provided to the Subgrantee.

#### 3.3.4 Deferral at Time of Measure Installation

Causes for deferral may be discovered at any time during the process of weatherizing a unit, only because causes may not be known until work actually commences, or more close examination by workers reveals something not otherwise discovered. The goal is to discover any and all causes for deferral in the audit stage, and there again, hopefully before an audit ever commences. Deferrals during weatherization installation may also prompt a need for partial weatherization.

a. Deferral at time of initial arrival
   Any mechanical or installation contractor arriving on site and, before conducting any work, discovers what they believe to be a cause for deferral shall immediately contact the auditor or Subgrantee to discuss the situation and determine a course of action. If deferral of the unit is agreed upon, the contractor shall fill out a deferral form on site and obtain the client's signature at the time of deferral. The Contractor shall then be entitled to a payment for the deferral as shown on the Price List.

b. Deferral after measures are installed, but before work is complete.
   Any mechanical or installation contractor arriving on site and, after any billable work is conducted, discovers what they believe to be a cause for deferral, shall immediately contact the Energy Auditor and/or the Subgrantee to discuss the situation and determine a course of action. Based on the situation, the Subgrantee may authorize completion of any one or more measures on the Work Order and deferral of the home thereafter. If deferral of the unit is agreed upon, the contractor shall fill out a deferral form on site and obtain the client's signature at the time of deferral. The contractor shall then submit an invoice for the work conducted but shall not be entitled to any compensation for the deferral itself as allowable under (a) above. Payment may not be made unless and until the "Administrative Procedures to be followed for Deferred Units" below is concluded.

c. Partial Weatherization – any unit with less than 2/3 completion of the required measures.
   Partial weatherization is allowable where one or more audit-approved energy conservation measures are or can be installed without any cause for deferral endangering the work conducted, and where the work will not create or exacerbate any health or safety issue. Partial weatherization of homes shall not be done as a routine matter and can only be approved by the Subgrantee where billable work was done on the home without knowledge

of the deferral cause. The Grantee must be kept informed when a partial weatherization is encountered.

#### 3.3.5 Administrative Procedures for Deferred Units

The owner/occupant of any unit that is deferred by the Subgrantee must be informed in writing of the deferral and the cause of the deferral. This notice shall be signed by the homeowner and the Subgrantee or their agent (auditor, contractor) and the record of such deferral must be kept for three years. If the unit's owner later comes forward with evidence that the cause of the deferral has been rectified, and they remain eligible, they may again be put on the wait list to receive services.

Invoice packages for deferred units must clearly explain the circumstances leading to the deferral, and, if the unit is not deferred prior to conducting a full audit, the reasons charges were incurred beyond the minimum deferral fee.

#### 3.3.6 Deferral Notification Letter and Appeal

Within 30 days following the initial notification of deferral, all owner/occupants in units deferred shall be sent a deferral letter with instructions for appeal of the denial or the steps the household must take to allow the Subgrantee to proceed with weatherization services. This letter and the original deferral form (signed by the owner/occupant at the time of deferral) shall be maintained in a separate deferred clients file for a minimum of 3 years from the date of the second letter. See Appendix D for deferral form.

## 3.4 INCIDENTAL REPAIRS (IRM)

Weatherization funds may be used for Incidental Repairs when such repairs are necessary to ensure that the weatherization measure is safe and effective. It is anticipated that the need for such repairs will be infrequent. The need for the repair must be fully documented by the Subgrantee in the unit case file.

The cost for incidental repairs on a given unit may not exceed $400. Since, the cost of the repair is included in the cost of the measure; it is included in the calculation of the savings to investment ratio for the related measure and is thus a part of the average cost per home.

An IRM does not contribute to the energy efficiency of a house or the safety of the occupants, but it is necessary for the installation or protection of another weatherization measure being installed at the same time, and they are categorized as Program Operations costs. These measures can only be justified by identifying the energy conservation measure to which it relates, typically beginning with the phrase "necessary to install…" or "necessary to protect…"

An example of such repair would include framing or repairing windows and doors which could not otherwise be caulked or weather-stripped. Another example would be the application of protective materials, such as paint, used to seal weatherization materials installed under the Program.

While repair to a roof to protect installed insulation may be an allowable repair, expanding this definition to include roof replacement or for other non-energy related repairs is not a permissible use of DOE funds. If the roof needs replacing then the unit should be deferred and referred to a rehabilitation program.

## 3.5 CLIENT EDUCATION

Each of the various agents in the Program has a part to play informing and educating the family on its role in energy conservation and in maintaining the improvements brought about by weatherization.

### 3.5.1 Subgrantee

The Subgrantee provides the case work which initiates client interaction and education. Some important areas of responsibility in the beginning are:

- Provide an initial overview of the WAP, eligibility, rules, and the process.
- Provide written educational information such as "A Brief Guide to Mold, Moisture, and Your Home" as part of the client education process.
- Provide the EPA pamphlet “Renovate Right: Important Lead Hazard Information for Families, Child Care Providers and Schools” to all families in units built before 1978. (Obtain a signed receipt from the family.)
- Provide a basic overview of the various weatherization services and how they will benefit the occupants of the home through improved comfort, safety, and cost savings.
- Coordinate weatherization job scheduling between the subcontractor(s) and the family.
- Be available to answer the family’s questions as the weatherization work progresses.
- Officially notify the occupants and/or owners of the unit with any reason for deferral of the work. Explain health & safety or other issues defining the obstacle.
- Be prepared with the knowledge of resources available outside of the weatherization funding to help families ameliorate problems causing a deferral.

### 3.5.2 Energy Auditor

The Energy Auditor can provide more in-depth information about the energy conservation measures which the family can take. Some important areas for the auditor to interact with the client include:

- Interview the client regarding any energy problems that they have noticed; temperature discomfort, a non-functioning heating appliance, leakiness & drafts in the unit, high utility costs, and other indicators of weatherization needs.
- Provide a simple explanation of the testing to be done in the unit, in terms of energy efficiency results.
- Discuss and explain audit results including recommendations which the auditor may have for the occupants.
- Explain the benefits of switching to energy efficient bulbs.
- Explain the importance of installing and maintaining smoke and CO alarms.

- Provide basic tips on energy conservation: room temperature set back periods, furnace filter change out (demonstration), and water heater temperature set back should be offered and performed at audit.
- Complete part 2 of the Health & Safety form to determine eligibility.

#### 3.5.2.1 Energy Efficient Lighting

The changing of incandescent light bulbs to energy saving bulbs is one of the more effective baseload measures that can be taken to increase energy savings. The energy auditor determines where the energy efficient bulbs are to be used and install as indicated on the Priority List and/or through the use of approved DOE modeling software.

### 3.5.3 Subcontractor

The subcontractor has an instructive role to play, particularly when new equipment or materials have been installed. The subcontractor role includes:

- Explain the proper care and maintenance of any measures that the company has installed.
- Explain and leave any manuals or other written materials for products the company has installed.
- Demonstrate to the occupant the operation of heating appliances or other newly installed equipment and parts.

### 3.5.4 Quality Control Inspector (QCI)

The QCI is a final inspector and maintains an important role to be sure that the family has an understanding of what weatherization was completed or installed. The inspector's responsibilities include:

- Interview the client as to the family's satisfaction with weatherization work, the improved comfort level, and decreased energy costs (if known).
- Answer any follow-up questions from the family regarding the weatherization work.
- Assess the family's knowledge of maintaining the weatherization work and re-instruct the client on the weatherization energy conservation techniques wherever needed.

## 3.6 AUDITING (Home Assessment)

The auditor plays a critical role in the success of the effectiveness of the weatherization measures conducted on the home by identifying the most effective measures for energy savings. The auditor must provide sufficient information for the crew to work on the home, such as types of materials needed for the job, dimensions of the job, measures to be taken, and any specific problems or conditions the crew may encounter. Measures to be implemented on the home are determined by visual inspections, diagnostic testing, practical considerations, measures priority lists, calculation of savings-to-investment ratios, and the Standard Work Specifications.

### 3.6.1 Auditing Tools and Equipment

The minimum tools and equipment shall include, but not be limited to:

- Approved blower door.
- Digital manometer.
- Carbon monoxide detector.
- Portable combustion analyzer such as Bacharach PCA or Fyrite Pro.
- Electronic combustible gas detector.
- Digital auto-ranging clamp multi-meter with milli-amp sensitivity.
- Priority List or HEAT software installed on a computer with current cost data (preferred in field but in office also acceptable).
- Digital camera.
- Flashlight and mirror.
- Appropriate protective equipment such as OSHA-approved respirator.
- Toolbox with miscellaneous tools.
- Stepladder or telescoping ladder.
- Extension cord.
- Battery powered drill with appropriate bits.
- Fan flow meter
- IR camera
- Pressure Pan
- Borescope
- Smoke pen
- CO meter – personal

### 3.6.2 Audit Record

The audit must be recorded on the proper audit form or electronic format and include as a minimum:

- Accurate dimensions of the unit.
- Completed data collection form.
- Reasons for deferral, if any;
- Information about the existing condition of the dwelling and its mechanical systems;
- Diagnostic tests, including combustion appliance analysis and blower door testing;
- Health and safety problems, including possible lead-based paint, moisture and/or mold, electrical problems, signs of rust and corrosion on combustion appliances;
- Existing insulation levels;
- Conditions the work crew needs to know in advance;
- Dwelling evaluation, considering existing conditions for energy savings opportunities and related health and safety problems;
- Identification of thermal and pressure boundaries.
- Assessment of the Priority Lists and measures to be taken;

### 3.6.3 Recommended Auditing Procedure

The following steps outline a basic approach and tips that an auditor may use as a guide to effectively assess a housing unit for weatherization.

#### 3.6.3.1 Preparation

Be knowledgeable of available partnership programs such as home repair, utility or others that might assist if additional funds are required for the job. Call the client to make an appointment. Verify address and directions. If you are still unsure of the client's location, use internet directions. Be sure to ask the client any questions necessary to conduct the audit and ask them not to operate their fireplace or other solid-fuel appliances the day of the audit (if possible), so that the blower door test can be safely done.

#### 3.6.3.2 Working with the Client

- Be prompt. If the client fails to answer the door on the first or second ring, try calling them on the phone while you're at the front door.
- Politely introduce yourself. Explain to the client why you are there and what you will be doing. Give them a business card. You may be the first representative of the Program the client has met.
- Small talk, even about the weather, helps to break the ice. Discuss Health and Safety concerns that may be present.
- Explain who you are and talk about the Program. This is a crucial element of the auditing process. The client is not well acquainted with you and has little, if any, idea what you and the installation contractor are going to be doing to their home.

- Act in a professional manner. Your behavior will influence how the client will prepare for the weatherization work, respond to the crew, respond to energy education, and how they will view the Program. Tell the client they are welcome to observe your audit if they choose. If they do, you have just accomplished two objectives. The client will be more at ease because of your openness. Inform them that you will be taking photographs of the home.
- Be sure to get a Client Release form signed before doing the audit.
- Involve the client. Explain that you will need to be "poking around" the house in the basement, attic, closets, bedrooms, and bathrooms. If possible, take the client through the home with you while you gather your information. Nobody knows the house better than the client.
- Explain the benefits of the weatherization work and what it means to their home.
- Don't rush your audit. Take your time and think things through. The advice and decisions you make may have a huge impact on the client's life.
- Don't make promises you are not sure you can keep.
- Perform an exit interview with the client. Explain what you found, what measures may be done, and an approximate date when they can expect work to begin. Communicate clearly anything that they may need to do before the crew can do their work, such as removing clutter from the attic.
- Collect any necessary signatures from the client on the forms provided.

#### 3.6.3.3 Gathering Necessary Information

- Do a quick review of the home to look for any reasons for deferral of the home
- Document any health and safety hazards are immediately present, contact the Subgrantee immediately.
- Make a visual assessment of the home's exterior and interior and the condition of the heating unit – the type, make, size, venting, condition, fuel type, and safety switches.
- Document any findings on the proper forms.
- Depending on the season, decide when to conduct the heating system efficiency test. In summer, do this first and then operate the blower door to cool down the house. In winter, do the reverse. Be sure to check all health and safety devices and test the carbon monoxide level of all combustion appliances.
- Inspect the rest of the house – bathrooms, attic, kitchen, bedrooms, closets, and crawl spaces. Be observant throughout this process. Look for obvious air leaks as well as health and safety issues. Check venting equipment; look for moisture problems, loose connections, etc.
- If there is no access to cavities then use other techniques such as an infrared camera, borescope, etc. to assess area to the best of your ability. If access is not possible, make a notation on the Work Order and have the installation contractor gain access and take appropriate steps after consultation with auditor.
- The pressure boundaries and thermal boundaries of each dwelling must be determined during the initial home assessment.
- All building surfaces that define the thermal and pressure boundaries must be in alignment and need to be inspected and measured for existing insulation R-values, structural integrity, and the need for repairs.
- Conceptually compare the inside and outside of the house to see if it "makes sense". Are there any "hidden" volumes/cavities that are not readily apparent?
- The field inspection must identify the most appropriate methods for reducing air leakage and convective bypasses and increasing the insulating value of thermal boundaries, when appropriate.
- As you continue to assess the dwelling, make sure it is set up for the blower door test. Close windows and exterior doors; deactivate vented combustion appliances, etc.
- Conduct a blower door test unless there are problems such as friable asbestos or an operating solid-fuel appliance.
- Walk around the house with the blower door running and check for air leakage. Perform an IR scan while the blower door is running.
- Check for leaks in basements that are considered to be conditioned.
- Perform other appropriate tests, such as zone pressure diagnostics.
- Measure the perimeter of the house from the inside or outside. If it is a complicated house, you may want to do this at the beginning of your audit and make your sketch of the floor plan so that you are oriented when inspecting the interior of the house.
- Take pictures to document challenging areas such as the heating system or any areas of the house that may be considered unusual. These can be a valuable reference when you're creating a work scope. Take pictures of moisture problems, date them, and upload all photos to the WAP drop box account. Use a "selfie-stick" to photograph hard-to-reach areas.
- Keep in mind that photographs document the existing conditions of the home prior to the WAP performing any services.

- Put personal and household items back where you found them. Relight any pilot lights that may have been extinguished during the audit.
- Review your paperwork before you leave to be sure you have collected all the information you need.

### 3.6.4 Special Mobile Home Considerations

While every home has its unique properties that the auditor needs to understand to create a good Work Order, mobile homes have other special considerations. The auditor will need to:

- Inspect the condition of the belly membrane. Document any deteriorated and/or missing areas.
- Verify that there is adequate insulation both in the center of the belly as well as complete filling of the wings.
- It is imperative that all combustion appliances be tested. Furnaces and water heaters which are sealed combustion, electric, or isolated from the interior of the house do not typically require combustion efficiency testing
- Atmospheric combustion water heaters shall be isolated from the interior of the mobile home.

### 3.6.5 Special Considerations for Atypical Homes

Where a home doesn't fit normal housing stock type and circumstances are such that a normal audit will not yield reliable or useful results, an auditor should contact the state monitor and may use an individual audit tool approved by DOE to yield a useful audit and Work Order.

### 3.6.6 Work Order

Once the Energy Audit is produced, it is the Subgrantee's responsibility to determine what measures are going to be implemented in a given unit. The Subgrantee's technical expert and Program Manager, analyze the audit information, the available unit budget, and recommended measures on the Work Order.

The Subgrantee is responsible to see that the measures that are actually ordered are justified by the results of the audit. The ordered measures must conform to the Program protocols, standards and guidelines. The measures must be completed within the proper sequence according to the approved Priority List. If measures are skipped, the justification for omitting them must be documented. The expenditures for the ordered measures must be allowable within Program guidelines. The measures must be accomplished within the available budget, including the limitations of the average cost per unit.

Any Work Ordered by the Subgrantee which does not meet the Program criteria may result in disallowed costs which may then be the responsibility of the Subgrantee.

Considering these factors, the Subgrantee converts the audit to a Work Order which is the form used to authorize the work. The Subgrantee then assigns the Work Order(s) to the appropriate weatherization subcontractor(s) for completion.

Work Orders must effectively communicate to the install crew sufficient information about the home and desired work scope measures. Develop the Work Order as soon as possible; the longer the delay, the higher probability of forgotten details.

The Work Order should include:

- Any health and safety items to be addressed
- All items needing to be addressed, in Priority List order (when applicable).
- Particular problems or considerations; crew needs to know in advance, including any special materials the crew may need to carry out the Work Order;
- Photographs, house diagrams or other documentation necessary to adequately inform the installing crew of work details and any hazards in the home;
- A unique Work Order number
- Auditor and Subgrantee contact information

## 3.7 AIR SEALING (SWS Section 3.0)

### 3.7.1 General Requirements

Before air leakage reduction measures are installed, the thermal/pressure boundary of the building envelope including the attic, basement or crawl space, and attached spaces like garages and sun rooms must be defined and all apparent health and safety problems must be corrected.

Prior to performance of any air sealing, an initial blower door test must be performed on each home as a means of determining its air leakage rate, and to locate and prioritize air leaks to be addressed with sealing measures. Blower door testing in the WAP is performed at $CFM_{50}$.
During the air sealing process, blower door readings should be monitored so that the effectiveness of air sealing can be determined by measuring the reduction in the dwellings $CFM_{50}$ leakage value. The contractor should use the blower door as a tool to reduce air leakage in the home. Initial and final blower door results should be recorded.

As air sealing work proceeds, measures generally become less cost effective because the larger leaks are sealed first. When the effectiveness of air sealing has diminished to a point below that which is deemed to be cost effective based on WAP budgeting criteria, the sealing work should stop.

### 3.7.2 Building Envelope

The thermal/pressure boundary of a home refers to those parts of the building that separate conditioned (heated and/or cooled) space from unconditioned space or from the outdoors. Unconditioned spaces within the building envelope but outside of the thermal/pressure boundary may include basements, crawl spaces, attics, and attached garages. Accurately establishing a home's thermal/pressure boundary is important for achieving both energy efficiency and thermal comfort, as well as ensuring acceptable indoor air quality for its occupants. To attain the best possible performance, this boundary must be kept free of gaps, holes, and thermal breaks that will allow for uncontrolled air flow or heat energy transfer.

While air sealing is often undertaken as a stand-alone measure, the air barrier that results from sealing should always be aligned with the envelope's thermal insulation to be most effective.

### 3.7.3 Blower Door Tests

Pre- and post-weatherization blower door testing must be completed on each home, with test measurements of $CFM_{50}$ air leakage documented in each client file.

Blower door testing must also be performed during air-leakage reduction work as part of blower-door-guided air sealing. Blower door tests can be waived only if:

- Problems may be created in the unit due to a lack of structural integrity.
- Solid-fuel combustion appliances are operating. Attempts must be made to have the client shut down a solid-fuel burning appliance approximately twenty-four hours before blower door tests will take place.
- Suspected friable asbestos-containing material may be significantly disturbed. Friable asbestos is defined as material that easily crumbles into very small particles with very little force such as finger or hand pressure. Friable asbestos is more dangerous than hard asbestos because of its ability to release very fine fibers into air which lodge into nose, windpipe, and lung tissue.
- Other documented extenuating circumstances are present.

### 3.7.4 Air Tightness and Minimum Ventilation

The WAP adheres to the ASHRAE 62.2 standard for guidance with air sealing. The target must be established by the Auditor based on the results of the initial blower door test and the size and configuration of the home.
The lower limit for air sealing a dwelling represents the point, as measured by CFM50 air leakage, below which the home may experience indoor air quality issues due to excessive tightness and lack of natural ventilation. Continuous ventilation may be necessary in tighter homes based on ASHRAE 62.2 calculations of the final air sealing results.

The Energy Auditor must determine a ventilation strategy based on ASHRAE 62.2 most current standard. The calculations may be determined using an approved software or online calculator:

### 3.7.5 Air Sealing Requirements

The Delaware Priority List does not prioritize or direct specific air sealing measures. The Energy Auditor, must first define the thermal/pressure boundary of the home, and then identify those air sealing measures that will establish an effective air barrier across the pressure boundary in the most cost effective manner. Blower door guided air sealing that must be carried out prior to performing other high priority measures. Examples include sealing the attic floor, shell sidewalls, or basement/crawl space ceiling before insulation is added.

Air sealing measures on dwellings are grouped into two categories: Primary and Secondary.

Primary Air Sealing: Must be performed prior to blower door guided air sealing. Examples include replacing window glass where glass is missing, and sealing large holes (greater than 3 inches) in the building envelope. There is little question about the cost effectiveness of sealing or repairing these leaks.

Secondary Air Sealing: Secondary air sealing is completed with the guidance of the blower door after all primary air sealing activities have been completed, and typically after attic, sidewall, and basement/crawl space insulation have been installed.

#### 3.7.5.1 Primary Air Sealing

Primary air leaks must be sealed beginning with the largest openings first, progressively working to the smaller leaks. Due to the stack effect, the most critical leaks are often those in the highest and lowest parts of the house. Always check:

- Chase ways around chimneys
- Plumbing and wiring penetrations
- Interior wall cavities
- Dropped ceilings
- Junctures between floors
- Knee wall bypasses
- Top plates
- Missing or broken glass in windows and doors
- Holes in exterior walls
- Supply and return ducts in space conditioning systems that may be subsequently covered by attic insulation
- Rim joist leaks if rim joists are inside of the thermal/pressure boundary.
- Vents in crawl space and basements that are inside conditioned space.
- In mobile homes, seal the plumbing chase behind the washer and dryer, water heater closet, under/behind bath tub, the furnace stack pipe and around the electric panel box.
- In double-wide mobile homes and modular manufactured homes, be sure that the marriage wall is sealed at both junctures; the top and bottom. Of the two (2) junctures, sealing the top is the most important.

Openings in recessed light fixtures must not be sealed unless the fixture is rated as a Type IC or Type ICAT (zero clearance) fixture, or unless it can be effectively boxed and sealed from above.

Seal all duct leaks, both supply and return, if the ducts are located in unconditioned spaces such as basements or crawl spaces.

Sealants must be used according to manufacturer's instructions. At a minimum, siliconized caulk must be used in all instances.

#### 3.7.5.2 Secondary Air Sealing

Secondary air sealing measures are to be performed only after primary air sealing, after insulation measures on attics, sidewalls, and floors have been completed, and when a need for additional air

sealing is necessary to bring the home to within the air tightness target range established by the Auditor.

Seal air leaks with caulking, weather-stripping, outlet seals, etc., as detected by blower door testing.

Repair or install dampers on dryer vents, kitchen and bathroom exhaust fans, window air conditioners, unused fireplaces and flues, etc.

Tighten windows by weather stripping or installing window channels. Re-glaze windows if there is noticeable air leakage, or if the window will likely deteriorate without re-glazing.

Seal exterior doors with weather stripping, sweeps and thresholds.

Seal basement sill plate in unconditioned basement.

Replace existing primary windows or doors if they are deteriorated beyond common repair methods. Any door, window, or sash replacement not yielding an SIR greater than one (1) should be considered a repair material, and is subject to the $400 Incidental Repair limit.

Seal utility service entry holes and basement wall leaks.

#### 3.7.5.3 Duct Sealing

Leaks in space conditioning ductwork can lead to a variety of problems in homes. While wasted energy is the most common concern, other problems include thermal discomfort, substandard indoor air quality, and hazardous combustion venting.

Duct leaks can occur both within the confines of the thermal/pressure boundary of the home, and outside of the thermal/pressure boundary. Seal and insulate all HVAC ducts that are in unconditioned spaces.

#### 3.7.5.4 Materials for Duct Air Sealing

Duct mastic is the preferred duct-sealing material because of its superior durability and adhesion. Apply at least 1/16-inch thick and use reinforcing mesh for all joints wider than 1/8 inch or joints that may experience some movement.

Siliconized acrylic-latex caulk is acceptable for sealing joints around panned joist spaces, used for return ducts.

Joints should rely on mechanical fasteners to prevent joint movement or separation. Tape should never be expected to hold a joint together nor expected to resist the force of compacted insulation or joint movement. Most glue based tapes such as cloth duct tape are not good materials for duct sealing because their adhesive often fails after a short time.

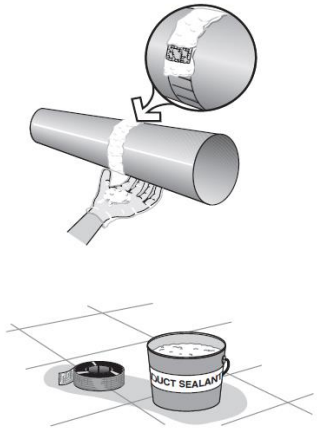


**Duct mastic:** Mastic, reinforced with fabric webbing, is the best choice for sealing ducts.

#### 3.7.5.5 Duct Leakage Sites

Exposed ducts located outside the thermal boundary or in an intermediate zone such as a ventilated attic or crawl space must be sealed. The following is a list of duct-leak locations in order of their relative importance. Leaks nearer to the air handler see higher pressure and are more important than leaks further away.

First, seal all return leaks within the combustion zone to prevent this leakage from depressurizing the combustion zone and causing back drafting.

- Plenum connection at air handler: These connections may be difficult to fasten and seal because of tight access. It is imperative that they are tightly sealed by applying mastic to this important connection even if it requires cutting an access hole in the plenum.
- Connections at branch takeoffs: These important joints should be sealed with a thick layer of mastic. Fabric mesh tape is a plus for new installations or when access is easy.
- Connections in adjustable duct work such as elbows are commonly found to be leaky.
- Tabbed sleeves: Attach the sleeve to the main duct with 3-5 screws and liberally apply mastic.
- Flexible duct work to solid connections: Apply mastic to the metal sleeve. Clamp the flex duct's inner liner over this strip of mastic with a fastener, zip tie or strap. Clamp the insulation and outer liner with another strap.

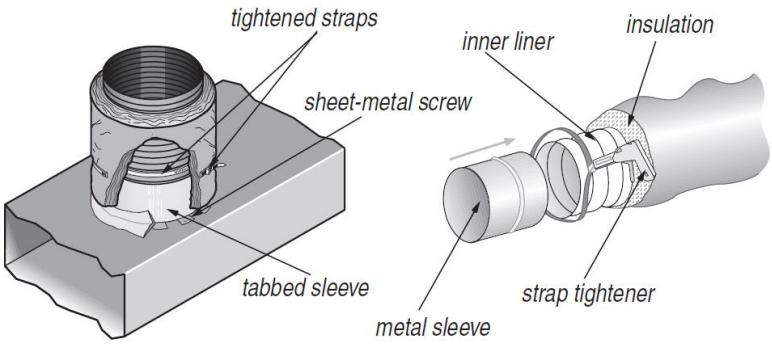


**Flexduct joints:** Flexduct itself is usually fairly airtight, but joints, sealed improperly with tape, can be very leaky. Use methods shown here to make flexduct joints airtight.

- Support ducts and duct joints with duct hangers where needed.
- Seal leaky joints between building materials composing cavity-return ducts, like panned floor cavities and furnace return platforms.
- Seal leaky joints between supply and return registers and the floor, wall, and ceiling to which they are attached.
- Consider sealing off supply and return registers in unoccupied basements.
- Seal penetrations made by wires or pipes traveling through ducts. Consider moving the pipes and wires and then patch the holes.

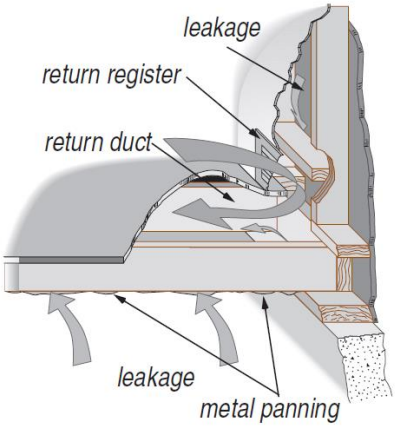


**Panned floor joists:** These return ducts are often very leaky and may require removing the panning to seal the cavity.

#### 3.7.5.6 Duct Testing

There are a number of techniques that can be used to test the ductwork and help locate leaks. These methods include: Careful visual inspection; Operating the air handler while searching for leaks and; pressure pan testing at registers and grilles while the blower door is operating and the basement or crawl space is opened to the outdoors. Using a duct blaster to test the HVAC system will aid to calculate the total amount of duct leakage.

Ductwork in crawl spaces or attics, and in manufactured housing, is susceptible to direct leakage to and from the outdoors. Testing must therefore be performed in all homes containing ductwork/ducts to determine if the ducts are leaking to a significant degree to or from the outdoors.

Combustion Appliance Zone (CAZ) testing must be conducted in all homes with existing combustion appliances, as a means of assessing duct leakage impacts on back drafting. CAZ testing is described in Section 3.10.8.2.

#### 3.7.5.7 Sealing Ducts Outside of the Thermal/Pressure Boundary

Ducts located outside of the thermal/pressure boundary represent the greatest potential for weatherization benefits resulting from repair, sealing, and insulating measures.

For exposed ducts that are located outside of the thermal/pressure boundary, consider altering this boundary to include the ducts. If it is not possible to bring the ducts within the thermal/pressure boundary, then repair and sealing measures must be performed.

Make all necessary ductwork repairs. Disconnected duct joints or ductwork that is at risk of detachment or failure at any connections must be repaired using suitable materials and fasteners. Flexible ducts and duct board plenums must be supported every four (4) feet.

All duct connections must be wiped clean with acetone to allow mastics and tapes to thoroughly adhere.

All ductwork connections must be sealed with UL 181 rated duct mastic. Apply mastic to a thickness of at least one sixteenth (1/16) inch at all leak sources and joints.

Fiberglass reinforcing mesh tape must be placed on all joint gaps wider than one eighth (1/8) inch, and on all joints that exhibit movement, prior to applying mastic. Tape must overlap gaps and joints by at least (1) inch on all sides.

Screws or other mechanical fasteners must be used to prevent joint separation.

Do not use metal or cloth-based duct tapes to seal duct leaks or joints, as the adhesive fails over time. These tapes can be used as a seal/cover material around filter access slots as they must be frequently removed and replaced upon filter change-out.

When connecting flex ducts to metal ducts, mastic the joining surfaces before sliding them together to affect the best possible seal. The connections must then be secured with either plastic or metal ties.

Siliconized or rubberized caulks are acceptable materials for sealing the seams of panned joist ducts and return air plenums

Pressure pan tests should be performed after repair and sealing is completed. Wherever ducts are largely accessible, individual ducts should show a pressure pan reading of no greater than one (1) Pa, and the total duct system should show a cumulative pressure pan reading of no greater than five (5) Pa with the blower door creating a fifty (50) Pa pressure differential across the envelope. This target should not apply to mobile home duct systems.

#### 3.7.5.8 Sealing Ducts within the Thermal/Pressure Boundary

Duct leaks within the thermal/pressure boundary usually do not have a significant energy impact. They can degrade space conditioning operating performance, however, and return duct leakage within the boundary can also impose a hazard to occupant health by causing poor indoor air quality and back drafting of combustion appliances.

Sealing of building shell areas must take place to complete the designated thermal/pressure boundary before any duct sealing is considered unless health and safety is considered such as a CAZ or spillage failure.

In homes where no combustion appliances are present, supply and return air ductwork located within the thermal/pressure boundary can be sealed at the discretion of the Auditor, per the requirements of section 6.7.2 above.

In homes where combustion appliances are present, all return air ductwork located within the thermal/pressure boundary must be sealed per section 6.7.2 above. Sealing of supply air ductwork is at the discretion of the Energy Auditor.

### 3.7.6 Sealing Around Chimneys and Vents

Special requirements are necessary for air sealing around chimneys and vents because of fire hazard.

Fire stopping around masonry chimneys must be constructed of galvanized steel not less than 26 gauge. This material must be used to seal gaps or chases greater than ¼ inch wide around masonry or metal chimneys. Aluminum flashing may not be used for this purpose.

Fire-rated stopping must be sealed to the chimney and the surrounding framing and finish materials with high temperature caulking.

Gaps of ¼ inch or less should be sealed with high temperature caulking only. This treatment is intended to stop the flow of air and water vapor into the attic from these gaps or chases.

In addition to stopping the flow or air around a chimney, a fire retardant non-combustible material must be installed to keep insulation at least 3 inches from the masonry or metal chimney.

### 3.7.7 Sealing Window Air Conditioners

Window air conditioners should be removed and stored by the client when not in regular use. When it is found that the client does not remove a window air conditioner for the heating season, the Auditor must provide client education to address the advantages of:

- Removing the air conditioner and closing the window, or
- Installing an airtight cover on the exterior or interior of the air conditioner unit, or
- Sealing the air conditioner unit from the interior using other methods.

In instances where large air leakage is evident in an air conditioner that is permanently left in place by a client, the auditor may specify air sealing around the unit to eliminate leakage, including providing an exterior or interior cover that is removable during the cooling season.

Air sealing around a window AC unit can be accomplished by adding ½" insulation board for the side panels, caulking around the unit to the window and the insulation board to create a sealed insulated area. Cover the insulation board with finished plywood or similar material, use paint and caulk to finish. Install backer rod or other compressible foam material between the two sashes to create a seal. Do NOT use a rigid material to seal between the sashes. (All work must comply with the Standard Work Specifications)

#### 3.7.8 Penetrations in Basement/Crawl Space Ceilings

If a basement or crawl space is defined as being within the conditioned space, leaks that are not connected to the outdoors should not be sealed. Sealing leaks between conditioned zones is generally not cost effective.

However, some penetrations in a basement or crawl space ceiling, while initially appearing to be between two conditioned zones within the thermal/pressure boundary, might be connected to the outdoors through attics, open interior walls, exterior walls, or unconditioned attached structures. If zonal pressure testing indicates the presence of these circuitous leaks, and after all reasonable attempts have been made to seal them where they terminate, then they must be sealed in the basement.

## 3.8 INSULATION REQUIREMENTS (SWS Section 4.1)

Aside from air sealing, adding insulation to the building shell is often the most cost effective measure performed in the Program. Insulation reduces heat loss through the building shell and, when dense packed, aids in sealing air leaks. Combined with the home's air barrier, insulation forms the thermal/pressure boundary. The air barrier and insulation should therefore always be aligned together if possible.

### 3.8.1 Attic Insulation

Existing attic insulation in older homes is often both insufficient and ineffective due to poor installation, settling, disturbance due to remodeling or other work-related activity, or lack of air sealing. Attic insulation produces the largest energy savings of any typical weatherization measure, and often is one of the more cost effective measures in terms of Savings-to-Investment Ratio (SIR). The SIR is determined using a Department of Energy approved energy modeling software.

#### 3.8.1.1 Attic Inspection

1. Prior to installing attic insulation, a thorough inspection of the attic area must be performed.

    a.) The inspection must include a determination of the existing R-value and integrity of existing insulation, the location of air leaks along the thermal/pressure boundary, and the suitability of the structure for receiving insulation.
    b.) The inspection should consider and determine the necessity of any repair work associated with the roof, soffits, vents, or installation of the attic insulation. Other notable repairs to mechanical venting, loose wiring and plumbing stacks will need to

be addressed. Attics will need to be clear of debris and storage, and repairs should be completed before installing insulation.

2. Make sure that any required attic air sealing measures have been performed before installing insulation. Attics should be tested for air leakage between the ceiling and attic space either by pressurizing the house with the blower door and checking for leaks with smoke, or using zone pressure testing. Blower door and zonal testing should be conducted and documented prior to, and then after, performing air sealing and prior to installing insulation in order to determine the quality and completeness of the air leakage and bypass sealing.

3. Visually inspect all areas to be insulated for the presence of "live" knob-and-tube wiring. If live knob-and-tube wiring is found, replace it with code-compliant wiring. If replacement is impractical due to budget or other reasons: Refer to section 3.1.2.8 in this document.

    a.) Isolate it from any possible contact with installed insulation by constructing dams or barriers leaving a 3 inch space from the wiring; or

    b.) If isolation is impractical, leave the area in proximity to the wiring un-insulated.

4. An attic Insulation Certificate shall be placed in the attic, in a visible space near the access point.

#### 3.8.1.2 Attic Moisture Management and Repair

1. Roof leaks and all other attic moisture problems must be repaired prior to air sealing and the installation of attic or roof insulation.

2. All mechanical vents from exhausting and combustion appliances must be vented to the exterior of the home. No exhaust fan vents, combustion appliance vents, or plumbing stacks may terminate in the attic.

#### 3.8.1.3 Attic Access

1. There must be functional access to the attic provided for post work inspection and potential future needs of the client.

2. A gable vent on a hinged plywood or OSB door is considered adequate access. An adequately sized gable vent held in place with screws (no nails) is acceptable if building a hinged door is impractical.

    a.) All interior attic hatchways in the ceiling must be: Sized to provide reasonable access for inspection.
    b.) Weather stripped and permanently insulated to a minimum R-25 (4" insulation board).
    c.) Held firmly in place with some form of mechanical closure.

3. Where pull-down stair assemblies serve as access to the attic, the stairway frame and ceiling edge must be air sealed around the framed opening. An insulated structural cover that fits above the folding stairway should be provided, having an insulating value of R-25 on top and R-15 on sides. A code compliant prefabricated option may be acceptable upon Subgrantee approval.

4. Attic ceiling access areas must have an insulation dam, made of rigid material that exceeds the height of insulation to be installed. The dam must be strong enough to hold the weight of a person entering or exiting the attic. The use of fiberglass or other non-rigid material as a dam around the attic access is not allowed unless limited roof height restricts rigid material or access becomes impossible with a rigid dam as in the case of some closet hatches. In that case, thick fiberglass batts are allowable. Examples of approved attic access insulation dam materials include:

    a.) Plywood of at least five-eighths (5/8) inch thickness.
    b.) Wood board of at least three-fourths (3/4) inch thickness.
    c.) Plywood of at least one-half (1/2) inch thickness with three-fourths (3/4) inch by two and one-half (2-1/2) inch strapping securely fastened to the exterior face of the plywood box, with the edge of the strapping flush with the top edge of the fabricated plywood box.

5. In some cases, particularly when the attic is floored and used for storage, it may work best to create a platform around the access. The area under the flooring should be dense packed. The dam can be non-structural but should be attached to the flooring of the attic.

6. When it is necessary to install an interior access hatch in a knee wall, it must be at least the width of the knee wall stud cavity and must be weather stripped and insulated with insulation board to the same R-value as the knee wall. One (1) or more latches should also be installed as necessary to ensure air tightness. If it is unreasonable to provide permanent access to knee wall areas, the attic and/or knee wall must be inspected by the Auditor before the area is sealed off. Insulation in the sealed knee wall area must also be adequately documented in the client file with photo documentation.

#### 3.8.1.4 Attic Shielding and Blocking

1. All heat-producing electrical fixtures in or protruding into the attic where insulation will be placed must be blocked or isolated with rigid non-combustible material to ensure a minimum insulation clearance of three (3) inches and a maximum clearance of six (6) inches on all sides. Blocking and isolation must extend four inches (4”) above any added surrounding insulation and shall be covered and sealed with a non-combustible material. No insulation shall be left within the blocked area. Any metal blocking straddling wiring must be notched so that it does not contact the electrical wiring. Exceptions to these requirements for blocking and isolation include Type IC and Type ICAT (insulation contact) recessed lights, Type IC and Type ICAT light/fan combinations and closed junction boxes.

2. In addition to stopping the flow of air around a chimney (see Section 3.7.5; Air Sealing), a barrier must be installed to keep insulation away from the masonry or metal chimney. Three inch fire retardant rock wool insulation is commonly used for this application. (All work must comply with the Standard Work Specifications)

#### 3.8.1.5 Attic Insulation Coverage and Density

1. Cellulose insulating material - either loose fill or dense pack as appropriate - is the preferred insulation to be installed in the attics of site-built homes. Other types of insulation including

fiberglass in the form of loose fill, dense pack, or batts, are also acceptable if specified on the Work Order.

2. All un-insulated open-joist attics must be insulated to a finished, settled value of at least R-49 where ever possible.

3. In open joist attics with existing insulation levels below R-30, add insulation to bring the finished settled value up to at least R-49.

4. For dwellings with properly installed insulation of R-30 or greater in open-joist attics, do not add additional insulation.

5. Attic insulation must completely cover conditioned areas and must be installed at an even depth, except where limitations exist.

6. Insulation must be installed to the outside edge of the top plate of an exterior wall. For ventilated soffits, baffles shall be installed and the cavity between the baffle and top plate shall be blocked with rolled, paper backed fiberglass insulation or other durable material to prevent insulation from filling the soffit area.

7. Insulation must be installed according to the manufacturer's specifications for density, coverage and R-value applicable to each specific application.

8. If the installation of loose fill insulation on top of existing batt or blanket insulation is warranted, make sure baffles are installed and the cavity between the baffle and top plate is blocked with rolled paper backed fiberglass insulation or other durable material to prevent insulation migration, and the perimeter then blown with loose-fill insulation.

9. Insulate enclosed attic cavities (under floors and behind slopes and knee wall cavities, etc.) with dense pack insulation to the specifications, as long as interior finish materials are able to withstand the pressure without damage.

10. Densely packing cellulose insulation in closed cavities with an appropriate hose or tube will help seal air leaks and bypasses in attics. However, dense packing in an attic does not eliminate the need to remove enough flooring to seal any obvious major leaks with caulking, foam, and other materials before insulation in installed.

11. When insulating enclosed attic cavities in low-slope or flat roof structures, it is preferred that insulation is installed in the rafter cavities from the attic, through the eave or from the interior of the home, rather than through the roofing materials.

12. The Energy Auditor must calculate the number of bags to be installed in restricted areas such as mobile homes ceilings and floor systems. These calculations should be obtained from the manufacturer’s specifications of the product supplied. This is the preferred method for determining the proper amount and density of material to be installed into an open or un-floored attic area to achieve a given R-value.

13. When a vapor retarder is installed with batt insulation, the retarder must be installed toward the heated space.

#### 3.8.1.6 Attic Vaulted or Sloped Ceiling/Roof Cavities

1. Unenclosed vaulted or sloped ceilings must be insulated using loose-fill or batt insulation to a value of up to the current energy code. An air barrier such as a baffle shall be installed to protect exposed insulation near vented soffits on sloped or vaulted ceilings.

2. If batt insulation is used, the vapor retarder must always face the heated space. The vapor retarder must be code compliant which requires it to be covered with a fifteen (15) minute fire-rated material, such as one-half (1/2) inch drywall taped and sealed.

3. If blown-in insulation is installed in an enclosed ceiling cavity, it must be dense packed in the vaulted or sloped ceiling/roof cavities at a pressure that will not exceed the structural capacity of the enclosing surfaces.

#### 3.8.1.7 Attic Knee Wall Areas

1. Knee walls must be insulated in a manner similar to side walls when they separate conditioned from unconditioned spaces, forming the thermal/pressure boundary (see Section 7.2). The Auditor must select the boundary surface – slope or knee wall – to be treated that is most appropriate for each dwelling.

2. Enclosed knee walls must be insulated with dense pack insulation that completely fills the cavities between studs.

3. Where knee walls are open on one side, fiberglass batt insulation having an R-13 insulating value must be installed to completely fill the joist cavity, with a vapor barrier facing toward the heated space. The pressure boundary should be created on the finished (heated) wall side by sealing all penetrations, wall to bottom plate, bottom plate to floor and floor to subfloor. This is easier to perform before the insulation is in place. Knee wall exteriors will be covered with an air barrier to prevent convective looping within the insulation and fiberglass exposure. Select materials that meet local fire codes based on use of knee wall.

4. An airtight seal must be created in the joist spaces beneath knee walls. Batt insulation in plastic bags, rigid material and foam sealant can be used for this purpose. In some cases the joists do not go under the knee wall but run parallel to the knee wall. In this case the last joist must be sealed to the material underneath it (lower floor ceiling) and to the subfloor to create the air boundary. The outside of that joist is then insulated along with the rest of the knee wall flooring. If there is flooring and that space will be dense packed, the last joist does not need to be individually sealed.

#### 3.8.1.8 Attic Storage Spaces

Where attic space is being used for storage before the attic is weatherized, the auditor must request that the client remove storage items from the area before the crew begins the job. If storage cannot be removed or if the attic will be used for substantial storage (>10%) after insulation is installed, the house shall be deferred. Underneath the flooring shall be dense packed and a dam installed around the perimeter to prevent blown in insulation from getting onto the platform.

#### 3.8.1.9 Attic Ductwork Insulation

1. Ductwork in attics must be sealed appropriately with the proper materials before insulation is installed (see Section 3.7.5).

2. When ductwork is located outside of the thermal/pressure boundary, it must be insulated with a minimum of R-8 fiberglass or urethane (boards or foam) insulation. Insulation should cover all exposed areas and be attached mechanically using stick pins, plastic tie bands, or plastic twine. Duct tape is not an acceptable material for securing duct insulation.

3. Replace all un-insulated or torn flex duct(s) with new R-8 insulated flex duct.

4. All seams where insulation pieces meet should be sealed with an approved adhesive material, to form a continuous vapor barrier.

5. A minimum of six (6) inches of clearance between duct insulation and combustion heat sources must be maintained, unless the insulation material is rated for closer proximity.

6. If ductwork outside of the thermal boundary is serving a cooling system, fiberglass duct insulation must have a vinyl or foil vapor barrier installed on the outer surface to prevent condensation on the ductwork from wetting the insulation.

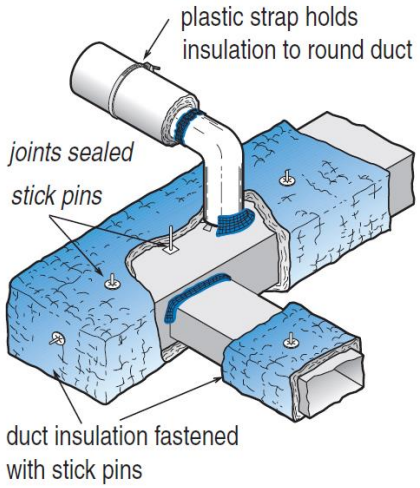


**Duct insulation:** Supply ducts, located in unheated areas, should be insulated to a minimum of R-8

#### 3.8.1.10 Attic Ventilation

1. Attic ventilation should be installed when needed to prevent ice dams. But no attic should be over-ventilated because this increases the overall leakage rate of the dwelling and can increase air leakage caused by the stack effect. Sealing attic bypasses, controlling indoor humidity levels, properly sealing attic bypasses, and insuring exhaust fans are extended to the outside should be the primary means in controlling moisture in attics, as attic ventilation has repeatedly been shown to be largely ineffective at doing so.

2. In the rare circumstance when attic ventilation is installed, use the following guideline: If the attic floor and bypasses are air-sealed and exhaust vent terminations extended to the outside, then one (1) square foot of net-free ventilation may be installed for every three hundred (300) square feet of attic floor area.

3. Ventilation Installation:

    a.) Ensure that existing vents are not blocked, crushed, or otherwise obstructed. Correct problems as necessary, or replace.
    b.) All ventilation openings must have suitable louvers and screens to prevent snow, rain, insects and pests (birds, squirrels) from entering the attic.

4. High-Low Vents:

    a.) Attic ventilation is most effective when there are equal amounts of low intake vents through soffits and eaves, and higher exhaust vents on the roof.
    b.) Roof vents must be installed close to the peak.
    c.) Install high gable vents at least three feet above the soffit or a gable vent used for low venting.

5. Gable Vents:

    a.) Gable-end vents must be installed as high in the gable as possible and positioned to provide cross ventilation.
    b.) Precautions must be taken to prevent the wind from "washing" insulation near the attic vents.

6. Roof Vents:

    a.) When roof vents are installed, they must be nailed and well-sealed to the roof to prevent water leakage. If possible, roof vents must be located on the areas of the roof least visible from the ground.
    b.) Do not install vents on a roof that is in poor condition.
    c.) Roof vents are not to be installed over rafters.
    d.) Roof vents must be tucked under shingles in a manner that sheds water. Surface mounted roof vents are not allowed.

7. Knee Wall Ventilation:

    a.) Knee walls or attic spaces declared outside of the thermal/pressure boundary and not connected to the main attic may need to be individually ventilated.

### 3.8.2 Sidewall Insulation

Installing dense pack sidewall insulation with uniform coverage and density is a proven energy efficiency measure because it maximizes insulating value, minimizes insulation settling, and effectively reduces air leakage though the walls. Dense pack sidewall insulation must be completed where un-insulated wall sections exist, including walls that separate conditioned spaces from unconditioned spaces, such as garages or unheated porches. There must be complete documentation in the client file giving adequate rationale whenever un-insulated walls remain un-insulated.

#### 3.8.2.1 Sidewall Inspection, Preparation, and Repair

1. Perform an inspection of the home from the interior and exterior prior to installing insulation. This inspection should identify all potential hazards and needed repairs and then note them in the Work Order and take corrective action. Siding material may contain asbestos and/or lead-based paint. If the home is pre-1978, lead-safe weatherization practices must be followed (see Section 3.1.2.4). Asbestos siding must not be handled by any unlicensed personnel.

2. Make reasonable repairs to interior walls as needed. In pre-1978 homes, repairs to these surfaces can generate lead-based paint dust and debris, so lead-safe work and clean-up practices must be employed (See Section 3.1.2.4). Locate any areas of the interior wall surface that are weak or not securely fastened. Holes drilled for insulation must be plugged, finished, sanded and primed.

3. Locate the positions of all wall-mounted switches and outlets before beginning insulation work. Locate all chases, utility runs, duct runs, wall heaters, vent fan penetrations, etc. prior to insulating. Some older houses used joist and stud bays as cold air returns. Check these to make sure you do not fill them with insulation. Insulation should not be installed against chimneys and some electrical fixtures. Block around these areas before installing insulation. If it is not possible to block around an area, avoid that area when insulating. Make sure all appropriate code clearance requirements are considered.

4. Inspect walls for live knob-and-tube wiring. Mark wall cavities that contain knob-and-tube wiring and do not insulate them. Only insulate cavities without live knob-and-tube wiring.

5. Find any interior openings above dropped ceilings, closets, soffit areas, pocket doors, or other structural details that may need preparation prior to insulating, and prepare as necessary. Locate critical framing junctures and ensure adequate insulation densities in these areas.

6. Determine the best drilling strategy. The preferred method is to lift the siding or temporarily remove it before drilling the sheathing. Remove as many rows as required to adequately insulate all wall cavities. Areas above windows and doors may require additional removal of siding.

7. Patch holes in exterior walls.

8. Determine the source of, and correct any problem that has led to, moisture in wall cavities prior to installing insulation. Repair or replace damaged, rotted, or deteriorated siding to ensure the integrity of the insulation. If any missing siding, flashing, etc. would allow disintegration of installed insulation, replace it with a comparable material.

9. Access structural additions and critical junctures to determine the ability of these areas to contain dense pack insulation. Correct any openings or gaps prior to installing insulation.

10. Construction details that allow insulation to escape from sidewall cavities (such as balloon framed walls) must be blocked or packed with insulation or other material in a manner that effectively retains the insulation.

#### 3.8.2.2 Sidewall Insulation Installation

1. Un-insulated wall areas above windows and doors (except in mobile homes), and the area below windows should be insulated, whenever possible.

2. Treatment options for un-insulated exterior walls without drywall, paneling, or other interior finish material are dependent on the SIR. It is generally preferable to insulate by adding interior finish material and insulating with cellulose. If the cost is prohibitive, fiberglass batts may be used.

3. If faced fiberglass batt insulation is used, the vapor retarder must face indoors.
   All vapor retarders must be covered with site appropriate permanent fire rated material such as one-half (1/2) inch drywall.

4. For all enclosed walls (where there is both exterior and interior surface finish materials), insulation must be installed using the tubing method rather than the nozzle method. As an exception, a nozzle may be used in small cavities such as above windows and doors, or in other spaces that are less than two (2) feet in height. The tubing method may be used to install insulation in the sidewall by drilling one hole per story. However, if the stud spacing is on twenty four (24) inch centers, two (2) holes per cavity will be required.

5. Walls must be dense packed whenever the strength of the interior wall surface material allows. Dense packing requires:

   a.) The proper machine settings. For dense packing, the air-to-material ratio must be high enough for a cellulose density of at least three and one-half (3.5) pounds per cubic foot, or a fiberglass density of at least two and two tenths (2.2) pounds per cubic foot. On the other hand, if this density is too high, the job of insulating will take much longer and it could damage some walls. A balance must be found for each machine, delivery system, and wall.

   b.) Effective delivery of the insulation material from the machine to the end of the wall tube. This includes:

   - No air leaks in the hose or at the joints.
   - A hose that is as short as possible for the job, but at least fifty (50) feet long.
   - Gradual reductions or transitions in the delivery system to minimize clogging.
   - A tube that is cut at a forty five (45) degree angle at the end to facilitate insertion into the wall cavity.

   c.) A technician that uses an effective technique characterized by:

   - Inserting the tube all the way up to the top plate and then pulling down just less than one (1) foot before the machine is turned on.
   - Pulling the tube out of the fill hole by just less than one (1) foot at a time as the flow in the hose and tube slows and stops due to increasing resistance in the cavity. If the tube is pulled out too soon, the density will decrease. Mark the tube at 1 foot increments to facilitate this process.
   - Inserting the tube downward through the fill hole after the wall cavity is filled upward from the fill hole. Inserting the tube with only the air running will help

"drill" through the cellulose that has fallen from the upward fill. This will help achieve a higher density in the downward fill.

#### 3.8.2.3 Sidewall Insulation at Key Framing Junctures

1. Open floor cavities between exterior wall cavities should be insulated in balloon-framed buildings. Only those parts of these floor cavities that border the exterior must be insulated. These cavities are usually open to the walls, allowing access from the rim or band joists and also from the wall cavities above or below these floor cavities. The preferred method of insulating the floor cavities is to use the "bag" method to create a plug in the floor cavity so that the wall cavity may be completely dense packed. Where the joist cavities run parallel to the band joist, the cavity should be completely filled.

2. All key junction points must be properly dense packed including wall-ceiling intersections; cabinet insets; ceilings over tuck-under garages; and knee wall and floored attic intersections.

#### 3.8.2.4 Sidewall Insulation Coverage, Density, and Voids

1. Sidewall insulation must be installed according to the manufacturers' recommended density, and in a manner that does not result in excessive material settling.

2. When dense pack insulating sidewalls with cellulose, install the insulation to a density of three and one-half (3.5) pounds per cubic foot. If dense packing using fiberglass, install to a density of one and six tenths (1.6) to two and one-half (2.5) pounds per cubic foot. If the insulation cannot be installed to at least the minimum densities specified, documented reasons must be included in the client file and do not dense pack the walls.

3. Cellulose is the preferred material for dense pack sidewall insulation. Blown fiberglass should only be used in a case where cellulose would not be an acceptable material. Total voids of more than five (5) percent are not allowed. The Energy Auditor or QC Inspector can use an infrared camera to determine acceptable coverage.

4. When fiberglass batts are used for sidewall insulation, faced insulation having an R-value of at least R-13 must be installed, with the vapor barrier installed toward the heated space of the structure.

5. It is not cost effective or practical to re-insulate stud cavities having existing insulation in place that fills more than ¾ of the individual cavities. However all walls with existing insulation should be inspected in at least three (3) stud bays to check for complete coverage. Do not assume all walls or stud bays are insulated just because some are. A thermal imaging camera can aid in determining the existence of insulation inside a studded wall cavity.

#### 3.8.2.5 Sidewall Plugging and Patching

1. Where possible, remove the exterior lap siding and drill the sheathing and/or sub siding for the installation of insulation. Holes in the sub-siding must be patched. Various materials

may be used for patching including wood plugs, plastic plugs, or spray foam insulation. Wood, plastic or foam plugs shall be sealed in place.

2. Any wood that is replaced as a result of the weatherization work and that is exposed to the weather must be primed. Color match as much as possible.

3. Stucco-sided dwellings may be insulated from the exterior or the interior. If insulated from the exterior, the stucco patch must match the existing stucco in texture and color.

4. Interior drill and blow techniques are preferred for homes with asbestos siding or masonry veneer siding. Be sure that the insulation does not come in contact with the masonry. Holes drilled for an interior blow are to be covered by wooden chair rail that is caulked in place and do not need to be sealed if the specified dense pack of the insulation is achieved.

5. In a concrete block house, do not insulate the gap between the concrete block and the interior wall. The concrete block can absorb moisture and transmit this to the insulation causing moisture problems.

#### 3.8.2.6 Completion of Side Wall Insulation

1. Always clean up all dust and debris that has been generated by the insulation process.

2. For forced air systems, turn on the air handler and look for dust to make sure that none of the ducts are full of insulation.

3. When side wall insulation is not called for in the Work Order or cannot be accomplished by the crew, the reason should be noted in the file.

4. Make sure that all information is filled out on the Insulation Certificate.

### 3.8.3 Basement and Crawl Space Insulation

This section addresses insulation requirements for basements, crawl spaces, and rim/band joists. Defining the appropriate thermal/pressure boundary is particularly important in determining where and how to place basement and crawl space insulation, and identifying and correcting moisture issues is especially important to achieving safe and effective insulation performance.

#### 3.8.3.1 Defining the Pressure/Thermal Boundary

1. The Energy Auditor must decide whether the first floor or the basement walls will serve as the home's thermal/pressure boundary, as this will determine whether or not floor and rim joist insulation will be installed, or some other means of weatherization will be deployed such as insulating basement walls.

2. Generally, it is preferable to bring a basement or crawl space into the building envelope. Doing so:

    a.) Takes advantage of ground coupling;

b.) Brings utilities, space conditioning equipment, and ductwork inside of the thermal envelope.
c.) Reduces the surface area between the conditioned space and the exterior.
d.) Utilizes a surface almost always easier to air seal and insulate.

3. A lived-in basement is always considered within the thermal/pressure boundary, but unused basements and crawl spaces can be within or outside of the boundary. In some cases making this decision will be difficult. The information below is intended to set guidelines for defining the pressure/thermal boundary for an unoccupied basement or crawl space.

4. The basement walls are the preferred boundary when:
   a.) There is good ground drainage and no existing moisture problems.
   b.) There is an interior stairway between the house and basement.
   c.) There are ducts and/or space conditioning systems in the basement.
   d.) Basement walls test tighter than the first floor.
   e.) The basement may be occupied in the future.
   f.) Laundry facilities are in the basement.
   g.) Water heating equipment is located in the basement.
   h.) There is a concrete basement floor.

5. The first floor is the preferred boundary when:

   a.) There is moisture or excessive dampness in the basement with no practical solution for mitigation;
   b.) Any other untreatable crawl space or basement pollutant source exists.

6. Basements and crawl spaces should be tested using zone pressure testing when the housing construction type or the air leakage rate indicates that there may be hidden air leakage into or from the basement or crawl space, or air quality problems are resulting from air leakage from a basement or crawl space. This test should be conducted prior to, and then after, installing insulation in order to determine the quality and completeness of the sealing. In addition, this test can help determine the appropriate location of the pressure and thermal boundaries.

#### 3.8.3.2 Moisture Inspection and Repair

1. All basements and crawl spaces must be inspected for problems associated with excess moisture. Identification of potential moisture problems shall be documented in the client file.

2. Repair any moisture problems that will degrade or diminish the effectiveness of weatherization measures.

3. If a vapor barrier is deemed necessary, it must be at least six (6) mil poly overlapped, taped at the seams, and connected to the base of the sill plate.

4. Inspect guttering and downspouts and repair where appropriate.

#### 3.8.3.3 Materials and Coverage for Floor Insulation

1. Fiberglass insulation, having a foil or impermeable paper vapor barrier facing, is required for floor insulation measures.

2. Insulation should be rated at least R-19, and should not be excessively compressed when installed.

3. Install R-19 fiberglass batt insulation between all floor joists that define a thermal boundary. Insulation should be installed without voids or gaps. Fit the insulation tightly around cross bracing and any obstructions.

4. Insulation must be in contact with the underside of the sub floor material above. Floor insulation must have the vapor barrier facing toward the heated area.

5. A crawl space clearance of less than eighteen (18) inches from the bottom of the floor joists to the ground is considered inaccessible for purposes of installing floor or perimeter insulation.

#### 3.8.3.4 Floor Insulation Installation

1. All appropriate air sealing of the floor should be completed before insulation is installed.

2. Floor insulation must be held securely in place with wire fasteners, nylon mesh, or another appropriate supporting method. Friction fitting or mechanical stapling floor insulation is not considered an appropriate method for securing the material.

3. Do not support insulation with Tyvek, Typar, or other house wrap stapled to the bottom edges of the joists. Do not use chicken wire or other metal mesh to support floor insulation. This can cause an electrical hazard to installers and subsequent home repair contractors.

4. Combustible materials must be kept a minimum clearance of six (6) inches from any combustion appliance or flue.

5. Floor insulation must be installed in a manner that provides as continuous a thermal boundary.

6. Floor insulation must not be installed in a manner that excessively compresses the material.

#### 3.8.3.5 Rim or Band Joist Insulation

1. Only seal and insulate the rim/band joist area if it is chosen to be the thermal/pressure boundary of the structure.

2. Insulation must be installed to a minimum of R-11, and comprised of fiberglass, rigid foam board, two-part foam, or a combination of these materials. An impenetrable layer of foam board or 2 part foam must be in direct contact with the band joist to act as the air barrier.

3. If there is significant air leakage in the rim/band joist area, it must be properly sealed before insulation is installed. If the dwelling is balloon framed, air seal the bottom of the stud cavities prior to installing the insulation.

4. Ensure that rim/band joist insulation is in direct contact with the underside of the first floor

#### 3.8.3.6 Foundation Wall Insulation

1. If the Energy Auditor determines the basement to be a conditioned space, then it is necessary to define the thermal boundary. Once the thermal boundary is determined, the Energy Auditor must decide what measures are required. Insulation must be installed in accordance with the current International Energy Conservation Code (IECC).

2. Framed wall cavities will require R-13 insulation enclosed with an approved pressure boundary.

3. Walls without framing must be covered with a continuous wall blanket of R-10 or greater and must be permanently fastened to the wall and extended downward from the floor to the frost line (frost line is 32 inches below grade).

#### 3.8.3.7 Ductwork Insulation

1. Whenever a basement or crawl space is determined to be located within the thermal/pressure boundary of a home, then any space conditioning ductwork located within those spaces does not require insulation.

2. Whenever ductwork is located outside of the thermal/pressure boundary the ductwork must be appropriately sealed and insulated to a minimum of R-8.

3. Ducts located outside of the thermal boundary, must have a minimum of R-8 fiberglass or urethane foam insulation on all ducts and plenums. Insulation should cover all exposed areas and be attached mechanically using stick pins, plastic tie bands, or plastic twine. Duct tape is not an acceptable material for securing duct insulation.

4. If ductwork outside of the thermal boundary is serving a cooling system, fiberglass duct insulation must have a vinyl or foil vapor barrier installed on the outer surface to prevent condensation on the ductwork.

5. All seams where insulation pieces meet should be sealed with an approved adhesive material, to form a continuous vapor barrier.

6. Replace all un-insulated or torn flexduct to comply with the 2012 IECC which is currently R-8 insulated flexduct.

7. A minimum of six (6) inches of clearance between duct insulation and heat sources must be maintained, unless the insulation material is rated for closer proximity.

### 3.8.4 Unconditioned Crawl Space

The standard approach is to "do no harm" to the exiting dwelling. The crawl space should generally remain true to its original design in the same condition in which it is found. Assess the crawl space to ensure that measures will not negatively affect the proposed weatherization work scope. The Energy Auditor must establish a continuous thermal and pressure boundary of the home's conditioned space. The information below is intended to set guidelines for addressing unconditioned crawl spaces.

1. The existing design of the unconditioned crawl space will not be altered.

2. Crawl space venting is generally not needed if the following conditions are met:
   a) The crawl space is dry with no evidence of standing water or moisture problems;
   b) There is proper surface drainage;
   c) There is a properly installed moisture barrier covering the entire crawl space floor.

3. If foundation wall vents exist, do not seal shut or block.

4. Air seal between the conditioned and unconditioned spaces.

5. Replace existing, deteriorated insulation with encapsulated fiberglass batts (R-19). Install new insulation to missing areas. Apply insulation to surfaces in the un-insulated, unconditioned crawl space only after air-sealing measures have been applied.

6. Seal and insulate HVAC distribution ductwork in the unconditioned space.

7. Seal and insulate mechanical vent ductwork in the unconditioned space. Dryer vents do not require insulation.

8. Insulate all water lines in the unconditioned space.

### 3.8.5 Insulating Materials

1. Only those thermal insulating materials listed in *Appendix A of the Code of Federal Regulations (CFR) Title 10, Part 440,* and which meet or exceed the standards specified in that Appendix A, can be used within the Program.

2. The WAP allows either fiberglass or cellulose insulation to be used interchangeably for both loose-fill and dense pack applications unless otherwise specified on the Work Order.

## 3.9 MOBILE HOME STANDARDS

Mobile homes typically use more energy per square foot than site-built homes, but their consistent construction makes them more straightforward to weatherize. The most important item to address in a mobile home is duct leakage. This is frequently a major source of air leakage as well as not getting conditioned air to the inside of the thermal boundary. Insulation upgrades save significant

amounts energy in mobile homes and frequently accomplishes air sealing at the same time. However, just as in a stick home, traditional air sealing presents good opportunities for saving energy.
Energy Auditors in the WAP are required to calculate an estimated bag count of insulation when the product is being installed in a restricted cavity.

Delaware has elected to use an established priority list of measures for mobile homes established as a result of a computer analysis of mobile-home measures. Selected candidate measures found in the Mobile Home Priority List (see Section **Error! Reference source not found.**), have a favorable avings to investment ratio (SIR). The chapter offers detailed guidance on how measures such as duct sealing, and belly, wall and roof insulation may be applied.

Mobile home heating systems are different from site-built-home heating systems, but they have many similarities. Follow the heating systems protocols and specifications later in this Field Guide when making decisions on replacement, tune ups etc.

### 3.9.1 Mobile Home Heating

Mobile-home furnaces are different from conventional furnaces in the following ways:

- A great majority of mobile homes are equipped with down-flow furnaces, designed specifically for mobile homes.
- Mobile home combustion furnaces are sealed-combustion units that use outdoor combustion air, unlike most furnaces in site-built homes. They don't have draft diverters or barometric draft controls.
- Mobile home furnaces require an outdoor source of combustion air.
- Mobile home furnaces have either a manufactured chimney that includes a passageway for combustion air or a combustion-air chute connecting the burner with the crawl space. This chute must extend below the belly of the home.
- Gas-fired furnaces have kits attached, containing alternative orifices, to burn either propane or gas.
- Return air is supplied to the furnace through a large opening in the furnace cabinet, rather than through ducts connected to the blower compartment.

Mobile home furnaces have been sealed-combustion since the early 1970s. Gas furnaces are either the old atmospheric sealed-combustion type or the newer fan-assisted mid-efficiency type. Some older less-efficient sealed-combustion furnaces had draft fans also.

Mobile-home oil furnaces should have a housing known as a combustion air intake tube that fits around the burner's air shutter and provides outdoor air directly to the burner.

**Important Note:** Install only furnaces designed for mobile homes. The installation should include the complete chimney and roof jack assembly.

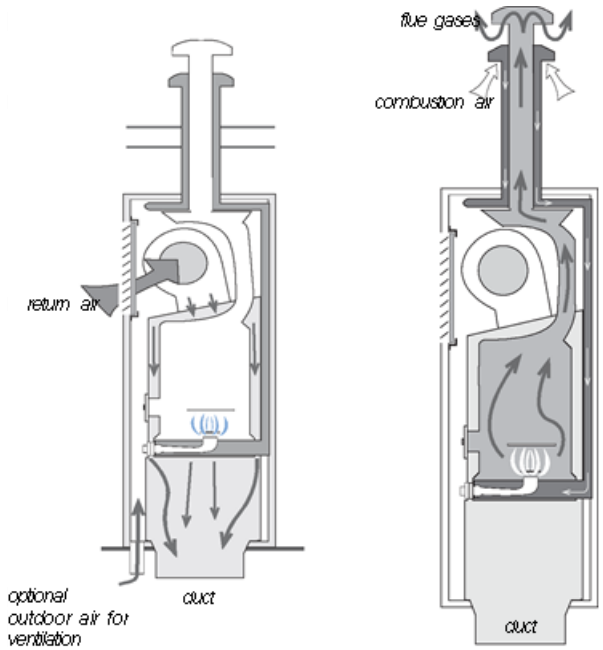


**Mobile home furnace airflow:** Return air flows from the hallway through the furnace grille. The air is heated and distributed through the ducts.

**Mobile home furnace combustion:** Combustion air enters through the flue assembly on the roof and feeds the flame through a sealed passageway. Some units get combustion air from underneath the belly via a flex tube that then goes directly into the combustion chamber.

### 3.9.2 Mobile Home Furnace Replacement

Mobile home furnace sizes are limited therefore Manual J calculations are not required for sizing mobile home furnaces.

Mobile home furnaces must be replaced by furnaces designed and listed for use in mobile homes. If a heat exchanger is available to replace the existing cracked heat exchanger, consider heat-exchanger replacement as a repair priority instead of replacing the furnace.
Consider replacing the existing furnace with a sealed-combustion, down-flow, condensing furnace. One manufacturer makes condensing furnaces, approved for mobile homes. In any case, replacement furnaces must meet specifications outlined in this Field Guide.

Mobile home furnaces may be replaced when any of the following 3 conditions is observed.

- The furnace has a cracked heat exchanger.
- Repair and retrofit exceed half of the replacement cost.
- The furnace is not operating and not repairable.

Follow these procedures when installing new mobile home furnaces.

- Install a new furnace base unless you are sure that the existing base exactly matches the new furnace.
- Attach the furnace base firmly to the duct, and seal all seams between the base and duct with mastic and mesh tape before installing the furnace.

- Support the main duct underneath the furnace with additional strapping if necessary.
- When replacing mobile home furnaces try to select a new furnace that gets its combustion air from the same location as the old furnace. Note the differences between the old and new furnaces particularly the alignment of the air intake, exhaust, and plenums.
- Install a new chimney that is manufactured specifically for the new furnace. Often the old chimney opening doesn't exactly line up with the new furnace's flue. In this case cut the opening large enough to allow the new chimney to be installed absolutely vertical. Install a ceiling plate to seal the new opening to the chimney. Make sure the chimney cap is installed absolutely straight.
- Mobile home furnaces have short chimneys, and their combustion process depends on a delicate balance between combustion air entering and combustion gases leaving. The furnace demands a vertical, leak-free chimney, and a properly installed chimney cap. Follow manufacturer's installation instructions exactly.

### 3.9.3 Mobile Home Air Sealing

The locations and relative importance of air-leakage sites was a mystery before blower doors. Some mobile homes are fairly airtight and some are incredibly leaky. A blower door must be used to guide air sealing work and to check Building Tightness Limits in mobile homes.

#### 3.9.3.1 Air-Leakage Locations

The following locations have been identified by technicians using blower doors as the most serious air-leakage sites. Window and door air leakage is more of a comfort problem than a serious energy problem.

- Plumbing penetrations in floors, walls, and ceilings. Water-heater closets with exterior doors are particularly serious air-leakage problems, having large openings into the bathroom and other areas.
- Torn or missing underbelly, exposing flaws in the floor to the ventilated crawl space.
- Large gaps around furnace and water heater chimneys. A large gap around the furnace chimney jack, combined with inadequate return air, can cause the blower fan to depressurize the home's attic and draw moist outdoor air into the cavity. This moist air will condense during some seasons and cause moisture damage.
- Severely deteriorated floors in water heater compartments.
- Gaps around the electrical service panel box, light fixtures, and fans.
- Joints between the halves of double-wide mobile homes and between the main dwelling and additions.

**Air Leak Locations and Typical $_{CFM50}$ Reductions**

| Air Sealing Procedure | Typical CFM50 Reduction |
|---|---|

| | |
|---|---|
| Patching large air leaks in the floor, walls and ceiling | 200–900 |
| Sealing floor as return-air plenum | 300–900 |
| Sealing leaky water-heater closet | 200–600 |
| Sealing leaky supply ducts | 100–500 |
| Installing tight interior storm windows | 100–250 |
| Caulking and weather stripping | 50–150 |

#### 3.9.3.2 Duct-Leak Locations

The following locations have been identified by technicians using blower doors and duct testers as the most serious energy problems.

- Floor and ceiling cavities used as return-air plenums. These return systems should be eliminated in favor of return-air through the hall or a large grille in the furnace-closet door. Note: When eliminating return air in the floor, take steps to remove restrictions to return airflow. For example, trim the bottom off interior doors or install grilles in doors or walls.
- Joints between the furnace and the main duct. The main duct may need to be cut open from underneath to access and seal these leaks between the furnace, duct connector, and main duct. With electric furnaces, you can access the duct connector by removing the bank of resistance elements. For furnaces with empty A-coil compartments, remove the access panel to access the duct connector.
- Joints and/or short ducts between the main duct and the floor register.
- Joints between register boots and floor.
- The poorly sealed ends of the duct trunk.
- Disconnected, damaged or poorly joined crossover duct.

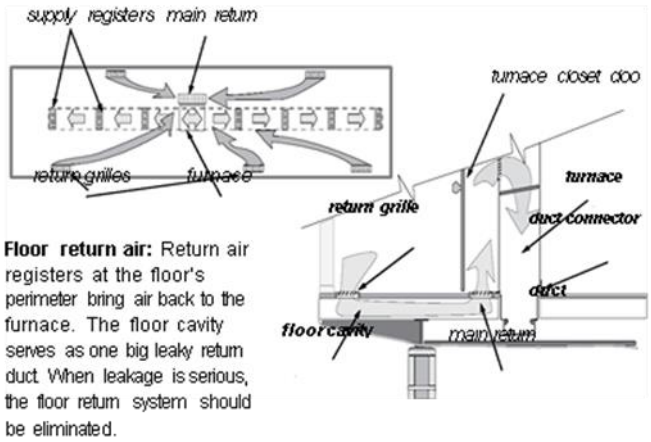

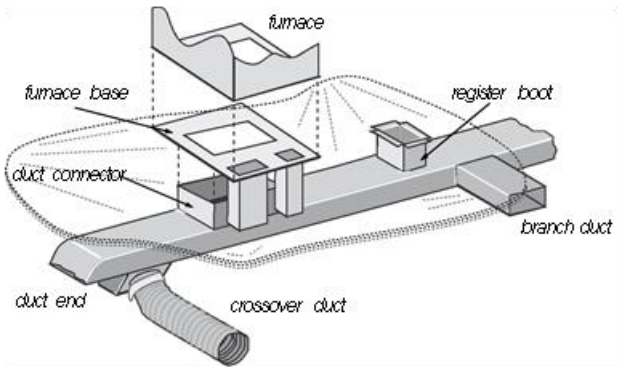


**Mobile home ducts:** Mobile home ducts leak at their ends and wherever a joint occurs—especially at the joints beneath the furnace. The furnace base attaches the furnace to the duct connector. Leaks occur where the duct connector meets the main duct and where it meets the furnace. Branch ducts are rare, but easy to find, because their supply register isn't in line with the others. Crossover ducts are found only in double-wide and triple-wide homes (A double-wide home has a single furnace; however each section Has its own main duct. These main ducts are connected by the crossover duct.)

### 3.9.4 Mobile Home Insulation

Over the past 15 years, effective methods for insulating mobile homes have been developed by weatherization agencies. If your contractor or crew is trained in these methods, use the following standards for floor and ceiling insulation.

Remove all significant moisture problems before insulating.

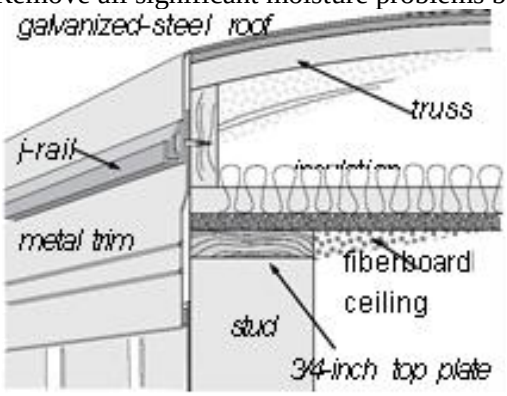


**Bowstring roof details:** Hundreds of thousands of older mobile homes were constructed with these general construction details.

#### 3.9.4.1 Blowing Mobile Home Roof Cavities

Blowing a closed mobile home roof cavity is similar to blowing a closed wall cavity, only the insulation doesn't have to be as dense. Blown-in fiberglass is used since cellulose is too heavy and absorbs water too readily for use around a mobile home's lightweight sheeting materials

There are three common and effective methods for blowing mobile home roof cavities. The first is cutting a square hole in the metal roof and blowing fiberglass through a flexible fill-

tube. The second is disconnecting the metal roof at its edge and blowing fiberglass through a rigid fill-tube. The third involves blowing fiberglass through holes drilled in the ceiling.

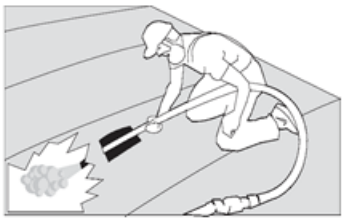

**Roof-top insulation:** Blowing fiberglass insulation through the roof top is effective at achieving good coverage and density on almost any

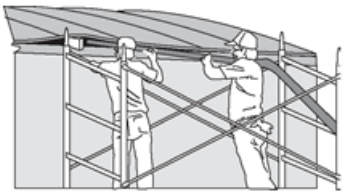

**Roof-edge blowing:** Using a rigid fill tube to blow insulation through the roof edge avoids making holes in the roof itself. However, this process requires much care in refastening the roof edge.

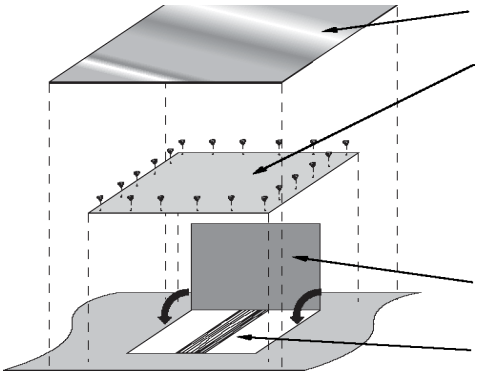


**Square roof patch:** An 18-inch square of foil-faced butyl rubber covers a base patch of galvanized steel, which is cemented with roof cement and screwed with self-drilling screws.

### 3.9.4.2 Preparing to Blow a Mobile Home Roof

- Reinforce weak areas in the ceiling.
- Inspect the ceiling and seal all penetrations.
- Take steps to maintain safe clearances between insulation and recessed light fixtures and ceiling fans. Assemble patching materials such as metal patches, roof cement, sheet-metal screws, putty tape, and roof coating.

### 3.9.4.3 Blowing Through the Top

This procedure involves cutting large square holes. Each square hole provides access to two truss cavities. If the roof contains a strong back running the length of the roof, the holes should be centered over the strong-back, which is usually near the center of the roof's width. A strong-back is a 1-by-4 or a 1-by-6, installed at a right angel to the trusses near their center point, to add strength to the roof structure.

- Cut 10-inch square holes at the roof's apex on top of every second truss, being careful not to damage the truss. Each square hole permits access to two truss cavities.
- Use a 2-inch or 2-$^{1}/_{2}$-inch diameter fill-tube. Insert the fill-tube and push it forcefully out toward the edge of the cavity.

- Blow fiberglass insulation into each cavity. Dense pack the outer 2' on each side of the roof. This acts to seal the toe board/fascia and reduce the amount of wind washing at the edges. Loose fill the rest of the roof.
- Stuff the area under each square hole with a piece of unfaced fiberglass batt so that the finished roof patch will stand a little higher than the surrounding roof.
- Thoroughly clean the roof areas with a metal brush (be careful not to put a hole thru the roof) or use a flame and scraper.
- Patch the hole with a 14-inch-square piece of stiff galvanized steel, sealed with roof cement and screwed into the existing metal roof.
- Cover the first patch with a second patch, consisting of an 18-inch-square piece of foil-faced butyl rubber, such as Peel and Seal. It must adhere to the metal part of the roof, not old patching material.
- Apply a final coating around the edges of the patch using a material like Rapid Roof or Pro Flex.

This approach fills the critical edge area with insulation. The patches are easy to install if you have the right materials. However, weather can be a bigger problem than with blowing through the edge.

#### 3.9.4.4 Blowing a Mobile Home Roof from the Edge

This procedure requires scaffold to be performed safely and efficiently. Mobile home metal roofs are usually fastened only at the edge, where the roof joins the wall.

- Remove the screws from the metal j-rail at the roof edge. Also remove staples or other fasteners, and scrape off putty tape.
- Pry the metal roof up far enough to insert a 2-inch-diameter, 10-to-14-foot-long rigid fill tube. (Two common choices include steel muffler pipe and aluminum irrigation pipe.)
- Blow insulation through the fill-tube into the cavity. Dense pack the outer 2' of the roof and loose fill the rest of the roof. Turn down the air on the blowing machine when the tube is a couple feet from the roof edge, in order to avoid blowing insulation out through the opening in the roof edge. Or stop blowing a foot or two from the edge, and stuff the last foot or two with unfaced fiberglass batts.
- Fasten the roof edge back to the wall using galvanized roofing nails, a new metal j-rail, new putty tape, and larger screws. The ideal way to re-fasten the metal roof edge is with air-driven galvanized staples, which is the way most roof edges were attached originally.

Note that re-installation of the roof edge is the most important part of this procedure. Putty tape must be replaced and installed as it was originally. This usually involves installing one layer of putty tape under the metal roof and another between the metal roof edge and the j-rail.

The advantages of blowing through the edge is that if you have the right tools, including a powered stapler, this method can be very fast and doesn't require cutting into the roof. The disadvantages of this procedure are that you need scaffolding and you can't do it if the roof has a strong-back.

#### 3.9.4.5 Blowing a Mobile Home Roof from Indoors

This procedure requires the drilling of straight rows of 3-inch or 4-inch holes and blowing insulation into the roof cavity through a fill tube.

- Drill a 3-inch or 4-inch hole in an unseen location to discover whether the roof structure contains a strong-back that would prevent blowing the roof cavity from a single row of holes.
- Devise a way to drill a straight row of holes down the center of the ceiling. If a strong-back exists, drill two rows of holes at the quarter points of the width of the ceiling.
- Insert a flexible plastic fill tube into the cavity, and push it as far as possible toward the edge of the roof.
- Dense pack the outer 2' of the roof and loose fill the rest of the roof with fiberglass insulation.

The obvious advantage to this method is that you are indoors, out of the weather. The disadvantages include being indoors where you can make a mess—or worse, damage something. Care must be taken not to damage the holes to insure that the plastic hole covers fit properly. If the holes are drilled in a straight line, they could be covered by a piece of finishing trim.

### 3.9.5 Mobile Home Floor Insulation

Mobile home floor insulation is a beneficial measure for cool climates. The original insulation is usually fastened to the bottom of the floor joists, leaving the cavity uninsulated and subject to convection currents. This greatly reduces the insulation's R-value.

Prior to installing floor insulation, always perform these repairs:

1. Repair plumbing leaks.
2. Tightly seal all holes in the floor.
3. Inspect and seal ducts.
4. Repair any holes in the belly membrane to support the insulation

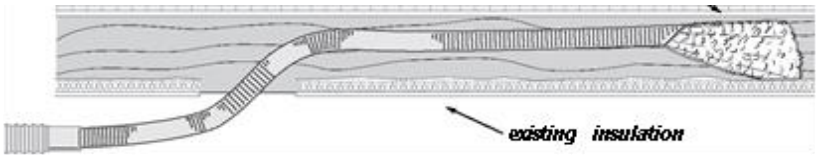


#### 3.9.5.1 Insulating the Floor

Two methods of insulating mobile home floors are common. The first is drilling through the 2-by-6 rim joist and blowing fiberglass through a rigid fill tube. The second is blowing fiberglass insulation through a flexible fill tube from holes in the underbelly. Blown fiberglass is the material of choice. When blowing through holes from underneath the home, consider blowing through damaged areas before patching them.

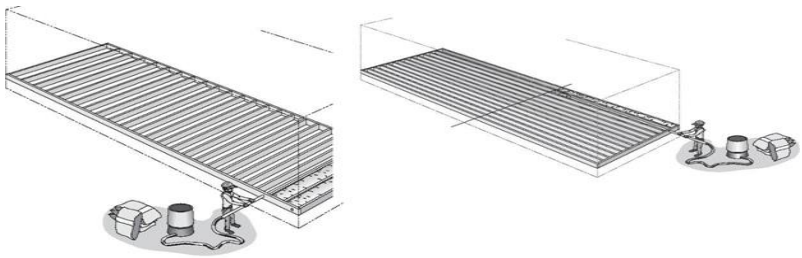

**Blowing crosswise cavities:** Blowing insulation into belly is easy if the floor joists run crosswise. However, the dropped belly requires more insulation than a home with

**Blowing lengthwise cavities:** Floors with lengthwise joists can rarely be filled completely from the ends because of the long tubing needed. The middle can be filled

Unfaced fiberglass batts may also be used to insulate floor sections where the insulation and belly are missing. The insulation may be supported by lath, twine, or insulation supports and then protected by belly paper or an equivalent.

.

### 3.9.6 Mobile Home Windows and Doors

Replacing windows and doors is generally not cost effective and should only be done if repairs cannot hold the window or door together any longer. New jalousie or awning type windows are not acceptable as replacements. Replacement windows with an emergency release are available, and one of these should be considered for bedrooms when replacing windows.

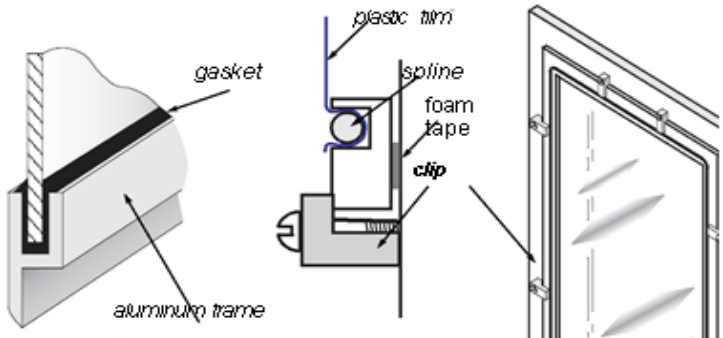


**Glass interior storms:** Traditional mobile home storm windows have aluminum frames glazed with glass.

**Plastic storms:** Some newer storm-window designs use a lightweight aluminum frame and flexible or rigid plastic glazing.

### 3.9.6.1 Mobile Home Storm Windows

Interior storm windows are common in mobile homes. These stationary interior storms serve awning and jalousie windows. Interior storm windows double the R-value of a single-pane window and also reduce infiltration, especially in the case of leaky jalousie prime windows.

Avoid replacing existing storm windows unless the existing storm windows cannot be re-glazed or repaired. With sliding primary windows, use a sliding storm window that slides from the same side as the primary window. Sliding storm windows stay in place and aren't removed seasonally. They are therefore less likely to be lost or broken.

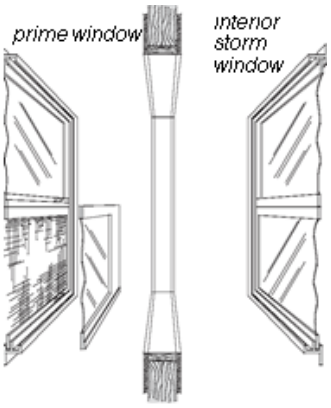


**Mobile-home double window:** In mobile homes, the prime window is installed over the siding outdoors, and the storm window is installed

### 3.9.6.2 Replacing Mobile Home Windows

Inspect condition of rough opening members before replacing windows. Replace deteriorated, weak or waterlogged framing members.

Prepare replacement window by lining the perimeter of the inner lip with $^{1}/_{8}$-inch thick putty tape. Caulk exterior window frame perimeter to wall after installing window.

### 3.9.6.3 Mobile Home Doors

Mobile-home doors come in two basic types: the mobile-home door and the house-type door. Mobile home doors swing outwardly, and house-type doors swing inwardly.
Door replacement is an allowable expense only when the existing door is damaged beyond repair and constitutes a severe air-leakage problem.

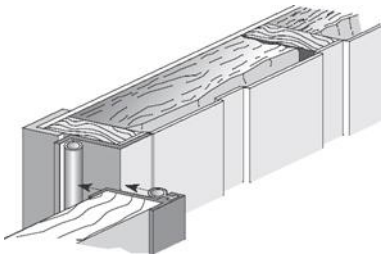

Mobile home door: Mobile home doors swing outwardly and have integral weather strip.

## 3.10 HEATING SYSTEMS (SWS Section 5.3)

Heating systems in a home are included in the evaluation and work of the WAP. Generally, the initial evaluation of the heating systems (HVAC and water heaters) will be a part of the Energy Auditor's responsibilities. Work called for on the Work Order must be conducted by qualified contractors who are properly licensed for the area in which they operate and which have been retained by the Subgrantees.

### 3.10.1 Energy Auditor Responsibility

Assessment and work on the heating systems are conducted both for the safe operation of the unit and for the efficiency of its operation. It is important for the Energy Auditor to ensure that the heating appliance is in safe running order prior to the commencement of weatherization work. The operational energy efficiency of the furnace is also important but is lower on the Priority List of weatherization steps.

The Energy Auditor is responsible for determining the status of the heating system in these basic areas:

- The condition and operation of the appliance (e.g. gas lines, burners, valves, power supply, other electrical, heat exchanger, fan, thermostat, blower operation, combustion air analysis)
- The condition of combustion gas venting systems (e.g. chimney, flue)
- The condition of the air distribution system (e.g. ducts, pipes, supply and return)
- Safety factors (e.g. CO testing, heat exchanger, clearance from combustibles, gas leak, oil leak, water leak, pressure relief valve, other appliance disrepair or deterioration)

### 3.10.2 Health and Safety

Once the appliance has been evaluated, the Energy Auditor may make the determination to order a clean tune and evaluation of the heating system. The CT&E should be completed prior to instituting other weatherization work.

Moreover, where the ongoing weatherization measures may affect the operation of the heating appliance, the (CAZ) combustion appliance zone tests must be conducted daily while work is being performed in the home.

### 3.10.3 Heating Appliance Replacement

In many instances, the furnace or other heating appliance may require some repairs including a standard 'clean and tune' to optimize its heating efficiency. These activities are considered standard energy efficiency measures and are an allowed cost of the job.

Energy Efficiency: Because of the cost factor in the equation, the replacement of a furnace or boiler is seldom found to be cost effective. Therefore heating appliances are replaced infrequently as an energy savings measure. If the cost to repair a unit exceeds 25% of the cost of a comparable new unit, or it can be determined that the required savings-to-investment ratio (SIR) is achieved, the measure should be treated as a weatherization energy efficiency measure. The expenditure for a replacement in this case is charged as an (ECM) Energy Conservation Measure. The savings to investment ratio (SIR) must be achieved using a DOE approved software. The SIR must be greater than 1.0.

Health and Safety: A new heating appliance may more often be installed as a matter of the health and safety of the occupants. This is done when a previous appliance is:

1. Unsafe, due to:
    - High CO greater than 100 ppm that cannot be corrected with a standard clean and tune
    - The cost of correction is more than one half (1/2) the cost of a replacement unit,
    - The unit has a cracked heat exchanger
2. Inoperable or un-repairable.

Replacement of the heating source for the purpose of health and safety must have photo documentation to be justified by the Subgrantee to be an allowable cost. The expenditure for a replacement in this case is charged as a (HSM) Health and Safety Measure. When replacing a heating system for health and safety purposes the replacement unit must have a greater efficiency than the unit being replaced. Health and Safety expenditures are not included in the average cost per unit calculation.

### 3.10.4 Subgrantee Responsibilities

The Energy Auditor's recommendations and justifications are to be considered when the Subgrantee formulates the Work Order. If the unit is to be replaced, the Subgrantee has the responsibility to see that the correct size unit is used. Manual J calculations must be performed prior to installing heating systems in single family homes. The Subgrantee may work with the state monitor(s) as well as the HVAC contractor, to determine the proper appliance to order.

The unit shall be sized using Manual J calculations. The cost of an incorrectly sized appliance may be questioned by the Grantee and fail to receive re-imbursement.

#### 3.10.4.1 Procurement

The replacement of a heating appliance calls for a supplemental bid from among the HVAC companies with which the Subgrantee has a contract. A minimum of three bids are required when replacing heating systems in the Delaware Weatherization Assistance Program. If three bids cannot be acquired the Subgrantee must receive approval with documentation from the Grantee. Bids must include the following:

- Name and address
- Existing appliance information
- Proposed appliance information
- Break down of costs to install the unit including permits

### 3.10.5 Utility Switching

Utility switching is generally not an allowable expense. If the Subgrantee determines that the switching of utility types is necessary with a specific unit, the Subgrantee must receive approval with documentation from the Grantee.

### 3.10.6 Water Heaters (SWS Section 7.81)

The Delaware Priority List allows for the installation of water heater tank wrap and pipe insulation.

Water heaters that are inside the thermal/pressure boundary generally should not be insulated. The first six (6') feet of both hot and cold water lines should be insulated (per the Priority List) to reduce the local conduction effect of the pipes.

However, a faulty appliance can be dangerous and thus may qualify for replacement as a health and safety measure if it meets the criteria set out in 3.10.6.2. Utility switching is sometimes necessary and is an allowable expense when replacing water heaters. Home owners must be notified of the change whenever switching utilities.

Hot and cold water pipes outside the thermal boundary may also require insulating or heat taping if they are subject to freezing temperatures. Additional information on the standards requirements for water pipe insulation is presented in the section on base load measures.

Do not insulate pumps, valves, pressure relief devices, or vents; do not insulate over heat tape unless the manufacturer's specifications indicate that such installation is safe.

#### 3.10.6.1 Energy Auditor Responsibility

Certain tests must be conducted by the Energy Auditor to ensure that the water heater is operating in a safe manner. These include:

- Visible inspection for rust or corrosion
- Inspect gas line sediment trap
- Check setting to ensure water temperature is safe
- Check to see that the temperature pressure relief valve is properly installed with a safety discharge pipe
- Test for gas leaks, if applicable
- Check for water leaks
- Test for back drafting and spillage (natural & worst case)
- Carbon monoxide levels in accordance with BPI technical standards
- Check electrical connections
- Assess need for insulation

#### 3.10.6.2 Water Heater Repair and Replacement

Typical water heater repairs will include replacement of the burner element, gas or water plumbing repair, valve replacement, flue repair, addition of a safety discharge pipe, and so forth.

Weatherization measures may include an insulation jacket and pipe insulation for a water heater when applicable to the situation.

A water heater may be replaced as a health and safety measure where it presents a hazard which cannot be repaired, the cost to repair it exceeds one half (1/2) the cost of replacement or where a presently leaking water heater may contribute to moisture or mold problems.

#### 3.10.6.3 Subgrantee Responsibility for Water Heaters

The Energy Auditor's recommendations and justifications are to be considered when the Subgrantee formulates the Work Order. If the unit is to be replaced, the Subgrantee has the responsibility to see that the correct tank size unit is used. The Subgrantee may work with the state monitor, as well as the Water Heater contractor, to determine the proper tank to order.

#### 3.10.6.4 Utility Switching for Water Heaters

Utility switching is sometimes necessary and is an allowable expense when replacing water heaters. If the Subgrantee determines that the switching of utility types is justified with a specific unit, the Subgrantee must receive approval with documentation from the Grantee.

### 3.10.7 Combustion Safety and Heating

**COMBUSTION SAFETY AND EFFICIENCY TESTING**

For both oil and gas, safety-testing is extremely important. Combustion systems with their burners, heat exchangers, and chimneys are often neglected for decades.

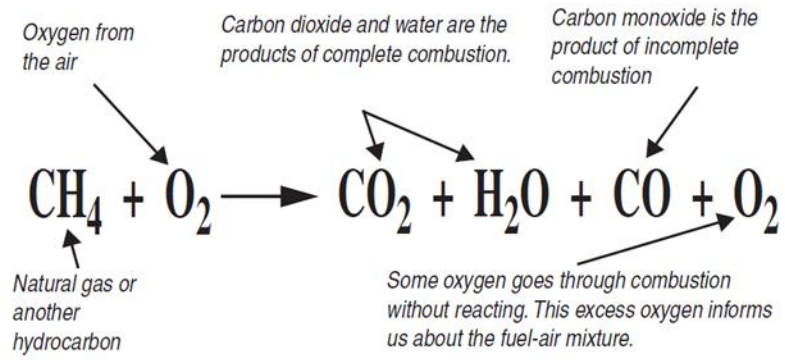

## *Gas burner safety and efficiency testing*

These following specifications apply to gas furnaces, boilers, water heaters, and space heaters.

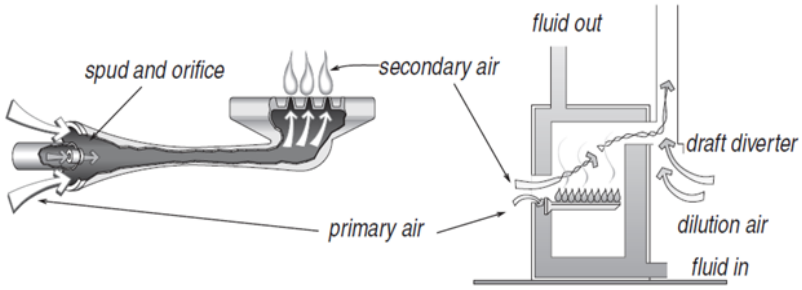


**Atmospheric gas burners:** These burners use the heat of the flame to pull combustion air into the burner. Dilution air, entering at the draft diverter, limits excess air and reduces the likelihood of condensation in the chimney.

#### 3.10.7.1 Gas-burner inspection and testing

Perform the following visual inspection and test procedures on all gas-fired furnaces, boilers, water heaters, and space heaters. The goal of these measures is to reduce carbon monoxide (CO), stabilize flame, and test safety controls and to guide required maintenance.

- Look for soot, burned wires, and other evidence of flame roll-out.
- Inspect the burners for dust, debris, misalignment, and other flame-interference problems.
- Assure that all 120-volt wiring connections are enclosed in covered electrical boxes. Furnaces and boilers should have dedicated circuits.
- Determine that pilot is burning (if equipped) and that main burner ignition is satisfactory.
- Check venting system for proper size and pitch.
- Check venting system for obvious obstructions, blockages, or leaks.
- Sample the undiluted combustion gases with a calibrated flue-gas analyzer during operation.

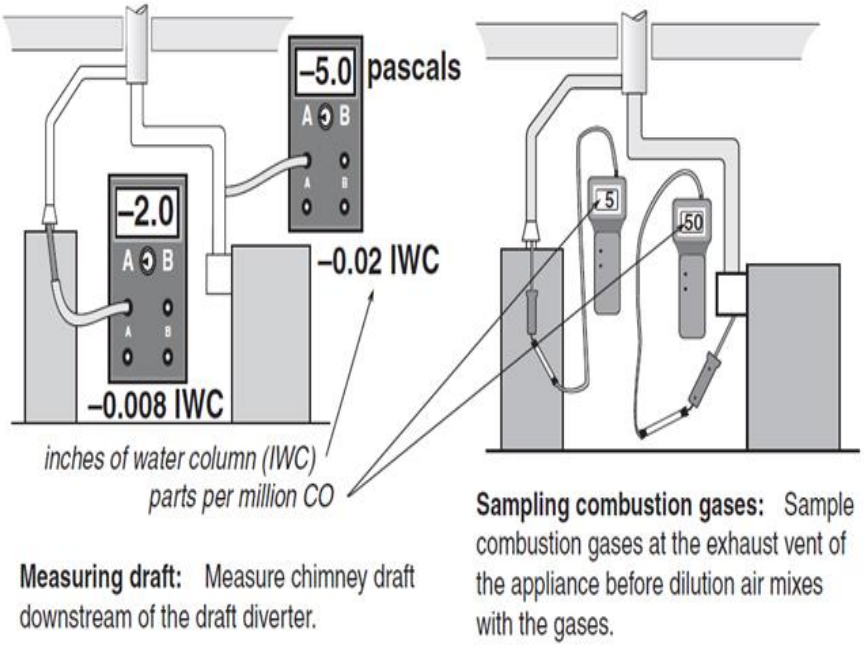


- Test for a change in O2 when the blower starts to determine whether the heat exchanger has a leak.
- Measure CO in undiluted flue gas.
- Measure chimney draft downstream of the draft diverter.
- Measure Net Temperature
- Measure % Efficiency

***Combustion Standards for 70+, 80+, and 90+ Gas Furnaces***

| Performance Indicator | 70+ | 80+ | 90+ |
|---|---|---|---|
| Carbon monoxide (CO) (ppm) | ≤ 100 ppm | ≤ 100 ppm | ≤ 100 ppm |
| Gross stack temperature (°F) | 400°–575° | 275°–450° | 90° |
| Heat rise (°F) | pmi* | pmi* | pmi* |
| Oxygen (%O2) | 4–10% | 4–10% | 4–10% |
| Gas pressure Inches (IWC) | 3.2–3.9 IWC*† | 3.2–3.9 IWC*† | 3.2–3.9 IWC*† |
| Draft (IWC) | –5 Pa. or –0.02 IWC | –5 Pa. or –0.02 IWC | 25–100 Pa. or +0.1 to +0.4 IWC* |

* pmi = per manufacturer's specifications; † IWC = inches water column

Proceed with burner maintenance and adjustment when:

- CO is greater than 25 ppm.
- Visual indicators of soot or flame roll-out exist.
- Unit continues to spill after 2 minutes
- Burners are visibly dirty.
- Measured draft is low or nonexistent.
- The appliance doesn't conform to the combustion specifications above.

Gas-burner maintenance includes the following measures.

- Remove causes of CO and soot, such as over-firing, closed primary air intake, and flame impingement.
- Remove dirt, rust, and other debris that may be interfering with the burners.
- Take action to improve draft, if inadequate because of improper venting, obstructed chimney, etc.
- Seal leaks in vent connectors and chimneys.
- Adjust gas input if combustion testing indicates over-firing or under-firing.

Note: If ambient CO levels rise above 70 ppm shut down the appliance and exit the affected area. Notify all occupants to leave the affected area until levels return to below 35 ppm.

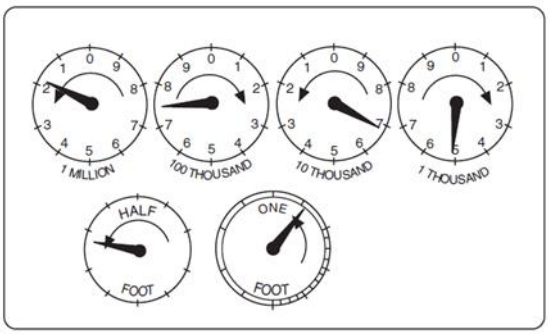


**Gas meter dial:** Use the number of seconds per revolution of the one-foot dial and the table on the following page to find the appliance's input.

### 3.10.7.2 Measuring BTU Input on Natural Gas Appliances.

Use the following procedure when it's necessary to measure the input of a natural gas appliance:

Turn off all gas combustion appliances such as water heaters, dryers, cook stoves, and space heaters that are connected to the meter you are timing, except for the appliance you wish to test.

1. Fire the unit being tested, and watch the dials of the gas meter.
2. Carefully count how long it takes for one revolution of 1/2, 1, or 2 cubic-foot dial. Refer to Table on page 71 and find that number of seconds in the columns marked "Seconds per Revolution." Follow that row across to the right to the correct column for the 1/2, 1, or 2 cubic-foot dial. Note that you must multiply the number in the table by 1000. Record the input in thousands of BTUs per hour
3. If the measured input is higher or lower than input on the name plate by more than 10%, adjust gas pressure up or down within a range of 3.2 to 3.9 IWC.
4. If the measured input is still out of range, replace the existing orifices with orifices sized to give the correct input.

***Input in thousands of Btu/hr for 1000 Btu/cu. ft. gas***

| Seconds per Revolution | Size of Meter Dial | | | Seconds per Revolution | Size of Meter Dial | | | Seconds per Revolution | Size of Meter Dial | | |
|---|---|---|---|---|---|---|---|---|---|---|---|
| | 1/2 cu. ft. | 1 cu. ft. | 2 cu. ft. | | 1/2 cu. ft. | 1 cu. ft. | 2 cu. ft. | | 1/2 cu. ft. | 1 cu. ft. | 2 cu. ft. |
| 15 | 120 | 240 | 480 | 40 | 45 | 90 | 180 | 70 | 26 | 51 | 103 |
| 16 | 112 | 225 | 450 | 41 | 44 | 88 | 176 | 72 | 25 | 50 | 100 |
| 17 | 106 | 212 | 424 | 42 | 43 | 86 | 172 | 74 | 24 | 48 | 97 |
| 18 | 100 | 200 | 400 | 43 | 42 | 84 | 167 | 76 | 24 | 47 | 95 |
| 19 | 95 | 189 | 379 | 44 | 41 | 82 | 164 | 78 | 23 | 46 | 92 |
| 20 | 90 | 180 | 360 | 45 | 40 | 80 | 160 | 80 | 22 | 45 | 90 |
| 21 | 86 | 171 | 343 | 46 | 39 | 78 | 157 | 82 | 22 | 44 | 88 |
| 22 | 82 | 164 | 327 | 47 | 38 | 77 | 153 | 84 | 21 | 43 | 86 |
| 23 | 78 | 157 | 313 | 48 | 37 | 75 | 150 | 86 | 21 | 42 | 84 |
| 24 | 75 | 150 | 300 | 49 | 37 | 73 | 147 | 88 | 20 | 41 | 82 |
| 25 | 72 | 144 | 288 | 50 | 36 | 72 | 144 | 90 | 20 | 40 | 80 |
| 26 | 69 | 138 | 277 | 51 | 35 | 71 | 141 | 94 | 19 | 38 | 76 |
| 27 | 67 | 133 | 267 | 52 | 35 | 69 | 138 | 98 | 18 | 37 | 74 |
| 28 | 64 | 129 | 257 | 53 | 34 | 68 | 136 | 100 | 18 | 36 | 72 |
| 29 | 62 | 124 | 248 | 54 | 33 | 67 | 133 | 104 | 17 | 35 | 69 |
| 30 | 60 | 120 | 240 | 55 | 33 | 65 | 131 | 108 | 17 | 33 | 67 |
| 31 | 58 | 116 | 232 | 56 | 32 | 64 | 129 | 112 | 16 | 32 | 64 |
| 32 | 56 | 113 | 225 | 57 | 32 | 63 | 126 | 116 | 15 | 31 | 62 |
| 33 | 55 | 109 | 218 | 58 | 31 | 62 | 124 | 120 | 15 | 30 | 60 |
| 34 | 53 | 106 | 212 | 59 | 30 | 61 | 122 | 130 | 14 | 28 | 55 |
| 35 | 51 | 103 | 206 | 60 | 30 | 60 | 120 | 140 | 13 | 26 | 51 |
| 36 | 50 | 100 | 200 | 62 | 29 | 58 | 116 | 150 | 12 | 24 | 48 |
| 37 | 49 | 97 | 195 | 64 | 29 | 56 | 112 | 160 | 11 | 22 | 45 |
| 38 | 47 | 95 | 189 | 66 | 29 | 54 | 109 | 170 | 11 | 21 | 42 |
| 39 | 46 | 92 | 185 | 68 | 28 | 53 | 106 | 180 | 10 | 20 | 40 |

#### 3.10.7.3 Gas-Burner Maintenance

Gas-burner maintenance includes the following measures:

- Remove causes of CO and soot, such as over-firing, closed primary air intake, and flame impingement.
- Remove dirt, rust, and other debris that may be interfering with the burners.
- Take action to improve draft, if inadequate because of improper venting, obstructed chimney, etc.
- Seal leaks in vent connectors and chimneys.
- Adjust gas input if combustion testing indicates over-firing or under-firing.

#### 3.10.7.4 Leak-Testing Gas Piping

Natural gas and propane piping systems may leak at their joints and valves. Find gas leaks with an electronic combustible-gas detector, often called a gas sniffer. A gas sniffer will find all sig-incant gas leaks if used carefully. Remember that natural gas rises from a leak and propane falls, so position the sensor accordingly.

- Sniff all valves and joints with the gas sniffer.
- Accurately locate leaks using a non-corrosive bubbling liquid, designed for finding gas leaks.
- All gas leaks should be reported immediately to the Subgrantee and repaired, even if the unit is deferred.

#### 3.10.7.5 Gas Range and Oven Safety

Gas ranges and ovens can produce significant quantities of CO in a kitchen. Over firing, dirt buildup, and foil installed around burners are frequent causes of CO. Oven burners are likely to produce CO even when not obstructed by dirt or foil. Test the range and oven for safety following these steps and take the recommended actions before or during weatherization.

1. Test each stove-top burner separately, using a digital combustion analyzer or CO meter and holding the probe about 8 inches above the flame for long enough time to obtain a stable reading.
2. Have burners cleaned and adjusted if they are producing more than 25 ppm. Burners often have an adjustable gas control.
3. Turn on the oven to bake at high temperature. Sample the CO level in exhaust gases at the oven vent and in the ambient air after 7 minutes.
4. If the CO reading is over 200 ppm or if the ambient-air reading rises to 35 ppm or more during the test, recommend action to reduce these levels. Actions include cleaning the oven, removing aluminum foil, or adjusting the burner's adjustable gas control.

Most range and oven burners are equipped with adjustable needle-and-seat valves. Most ranges also have an adjustable gas regulator that services the entire unit.

- Never use a range burner or gas oven as a space heater.
- Educate the client to turn on the kitchen exhaust fan when using the range or oven for extended periods of time.

- Keep range burners and ovens clean to prevent dirt from interfering with combustion.
- Burners should display hard blue flames. Yellow or white flames, wavering flames, or noisy flames should be investigated by a trained gas technician.

#### 3.10.7.6 Oil-Burner Safety and Efficiency

Oil burners require annual maintenance to retain their operational safety and combustion efficiency. Testing for combustion efficiency (steady-state efficiency), draft, carbon monoxide, and smoke should be used to guide and evaluate maintenance. These procedures pertain to oil-fired furnaces, boilers, and water heaters.

##### 3.10.7.6.1 Oil-Burner Inspection and Testing

Use visual inspection and combustion testing to evaluate oil burner operation. An oil burner passing visual inspection and giving good test results may need no maintenance. If the test results are fair, adjustments may be necessary. Unsatisfactory test results may indicate the need to replace the burner or the entire heating unit.

Follow these steps to achieve a minimum standard for oil-burner safety and efficiency:

- Inspect burner and appliance for signs of soot, overheating, fire hazards, or wiring problems.
- Verify that all oil-fired heaters are equipped with a barometric draft control, unless they have high-static burners or are mobile home furnaces.
- Assure that all 120-volt wiring connections are enclosed in covered electrical boxes. Each oil furnace or boiler should have a dedicated electrical circuit.
- Inspect fuel lines and storage tanks for leaks.
- For forced air units, test for a change in O2 before and after the blower starts to determine whether the heat exchanger has a leak. For hydronic units, look for water leaks on the floor.
- Check to see if flame ignition is instantaneous or delayed. Flame ignition should be instantaneous, except for pre-purge units where the blower runs for a while before ignition.
- Sample undiluted flue gases with a smoke tester, following the smoke-tester instructions. Compare the smoke smudge left by the gases on the filter paper with the manufacturer's smoke-spot scale to determine smoke number.
- Analyze the flue gas for O2 or CO2, temperature, CO, and steady-state efficiency (SSE). Sample undiluted flue gases between the barometric draft control and the appliance.

***Minimum Combustion Standards for Oil-Burning Appliances***

| Oil Combustion Performance Indicator | Non-Flame Retention | Flame Retention |
|---|---|---|
| Oxygen (% $O_2$) | 4–9% | 4–7% |
| Stack temperature (°F) | 325°–600° | 300°–500° |
| Carbon monoxide (CO) parts per million (ppm) | ≤ 100 ppm | ≤ 100 ppm |
| Steady-state efficiency (SSE) (%) | ≥ 75% | ≥ 80% |
| Smoke number (1–9) | ≤ 2 | ≤ 1 |
| Excess air (%) | ≤ 100% | ≤ 25% |
| Oil pressure pounds per square inch (psi) | ≥ 100 psi | ≥ 100-150 psi (pmi)* |
| Over-fire draft (IWC negative) | 5 Pa. or .02 IWC | 5 Pa. or .02 IWC |
| Flue draft (IWC negative) | 10–25 Pa. or 0.04–0.1IWC | 10–25 Pa. or 0.04–0.1IWC |

* pmi = per manufacturer's specifications

- Measure flue draft between the appliance and barometric draft control and over-fire draft over the fire inside the firebox. Testing for over-fire draft may not be possible in newer units.

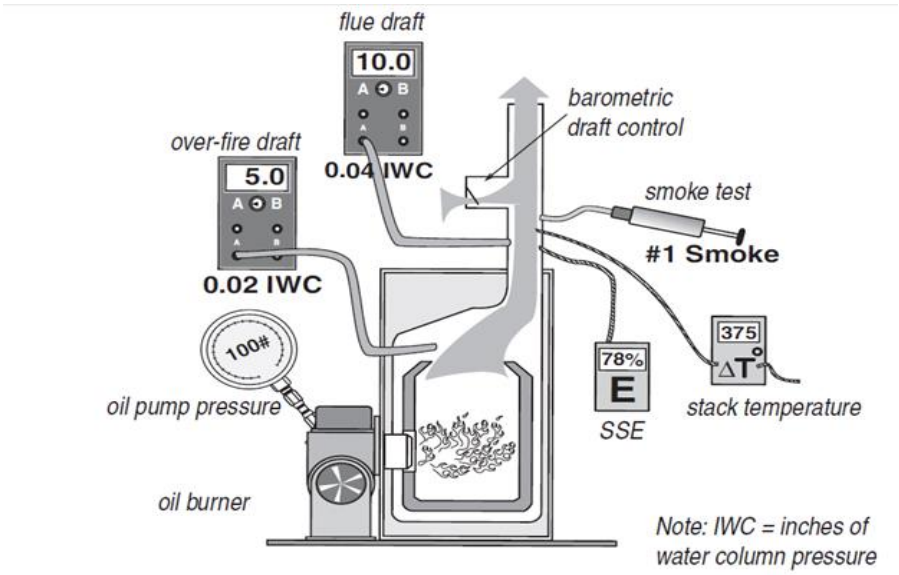


**Measuring oil-burner performance:** To measure oil-burning performance indicators, a manometer, flue-gas analyzer, smoke tester, and pressure gauge are required.

### 3.10.7.6.2 Oil Burner Maintenance and Adjustment

After evaluating the oil burner's initial operation, perform some or all of the following maintenance tasks as needed to optimize safety and efficiency as part of weatherization service.

- Verify correct flame-sensor operation.
- Replace burner nozzle after matching the nozzle size to the home's heat-load requirements.
- Clean the burner's blower wheel.
- Replace oil filter(s).
- Clean or replace air filter.
- Remove soot and sludge from combustion chamber.
- Remove soot from heat exchange surfaces.
- Clean dust, dirt, and grease from the burner assembly.
- Check efficiency and provide results once unit has been cleaned and tuned.

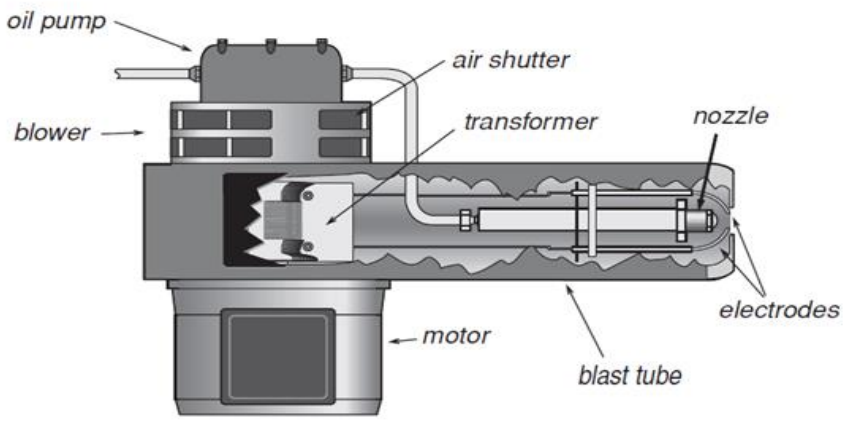


**Oil burner:** Performance and efficiency will deteriorate over time if neglected. Annual maintenance is recommended.

- Set oil pump to correct pressure.
- Adjust air shutter to achieve oxygen and smoke values, specified in Section 3.10.7.6.1
- Adjust barometric damper for flue draft of 5–10 Pascals or 0.02-to-0.04 IWC (before barometric damper).
- Adjust gap between electrodes to manufacturer's specifications.
- Repair the ceramic combustion chamber, or replace it if necessary.
- Measure high-limit shut-off temperature and adjust or replace the high-limit control if the shut-off temperature is more than 200° F for furnaces or 180° F for hot-water.
- Measure transformer voltage, and adjust to manufacturer's specifications if necessary.
- Time the CAD cell control or stack control to verify that the burner will shut off, within 45 seconds, when the CAD cell is blocked from seeing the flame.

After these maintenance procedures, the technician performs the diagnostic tests described previously to evaluate improvement made by the maintenance procedures and to determine if fine-tuning is required.

#### 3.10.7.6.3 Burner Replacement with Flame-Retention Burner

A flame-retention burner is a newer type of oil burner that produces higher combustion efficiency by swirling the mist or oil and air to produce better mixing. Flame-retention burners, which have been available for more than 20 years, waste less heat and have steady-state efficiency (SSE) of 80% or slightly more. Replacing an old-style burner with a flame-retention model may be cost effective if 75% SSE cannot be achieved. Flame retention-burner motors run at 3450 rpm and older oil burners run at 1725 rpm motor speed. Looking for the nameplate motor speed can help you discriminate between the flame-retention burners and their older cousins.

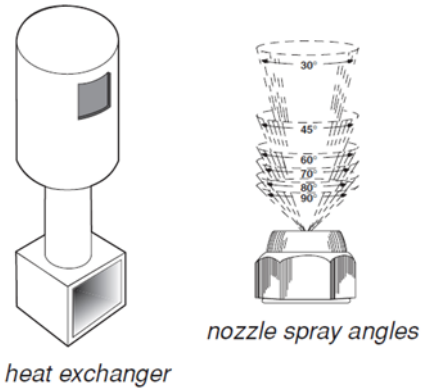


**Oil spray pattern and combustion chamber:** Matching the burner's spray pattern to the combustion chamber is important to retrofit applications.

If a furnace or boiler has a sound heat exchanger but the oil burner is inefficient or unserviceable, the burner may be replaced by a newer flame-retention burner. The new burner must be tested for efficient and safe operation as described previously.

- Size the burner and nozzle to match the building's heat load, making adjustments for new insulation and air sealing done during weatherization. (With steam heating, size the burner to existing radiation surface area.)
- Install a new combustion chamber, choosing one that fits the size and shape of the burner flame. Or, change nozzles on the new burner to produce a flame that fits an existing combustion chamber that is still in good condition. Either way, the flame must fill the combustion chamber without impinging to the point where soot is formed.

### 3.10.8 Measuring Draft and House Pressures

The main purpose of measuring draft is to insure that the combustion gases are being vented from a dwelling. Draft is measured in inches of water column (IWC) or Pascals. House pressure affects draft and must be measured and controlled.

Technicians create worst-case conditions for naturally drafting appliances in order to insure that appliances will draft even in worst-case conditions of house depressurization. Depressurization is among the leading cause of back drafting and flame roll-out. Testing for adequate draft of all combustion appliances is required at the end of each days weatherization work, and before final inspection.

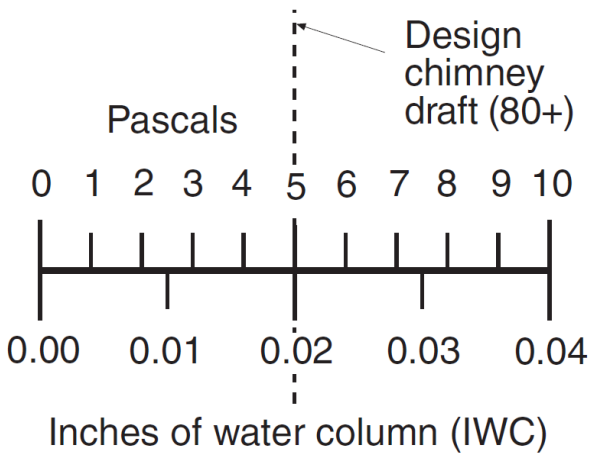


#### 3.10.8.1 Draft Characteristics in Combustion Appliances

Technicians create worst-case conditions for naturally drafting appliances in order to insure that appliances will draft even in worst-case conditions of house depressurization. Depressurization is among the leading cause of back drafting and flame roll-out. Testing for adequate draft of all combustion appliances is required before final inspection. There are several different classifications of combustion appliances based on the type of draft they employ to exhaust their flue gases. Most existing appliances exhaust their gases into an atmospheric chimney. An atmospheric chimney produces negative draft—a slight vacuum. The strength of this draft is determined by the chimney's height, its cross-sectional area, and the temperature difference between the flue gases and outdoor air. Atmospheric draft should always be negative.

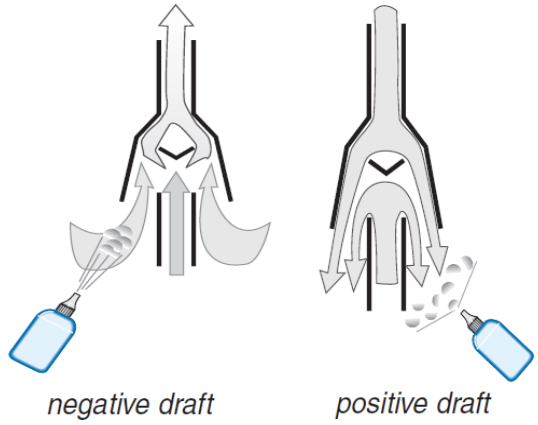


**Negative versus positive draft:** With positive draft air flows down the chimney and out the draft diverter. A smoke bottle helps distinguish between positive and negative draft.

Most existing gas and oil appliances are designed to operate with at least negative 0.02 inches of water column (IWC) or –5 Pascals chimney draft. Tall chimneys located indoors can produce strong drafts and short chimneys or outdoor chimneys typically produce weaker drafts. Wind and house pressures also affect draft.

Atmospheric combustion appliances exhaust combustion gases solely by their buoyancy. Fan-assisted appliances have the help of a small fan near the exhaust of their heat exchanger that regulates airflow through the heat exchanger.

Power burners have fans at the intake of the combustion chamber to mix combustion air with fuel and inject the mixture into the combustion chamber. The standard power oil burner is the most common type of power burner. Most appliances with draft-assisting fans and power burners vent into atmospheric chimneys.

Positive-draft appliances, which are either condensing or non-condensing, vent either horizontally or vertically and require airtight chimneys. Most positive-draft appliances are condensing furnaces and boilers. Most non-condensing positive draft appliances are boilers, although some furnaces and newer water heaters are also designed to vent through positive-draft, sidewall vents. These appliances have draft in the range of +0.05 to +0.35 IWC or 12 to 85 Pascals and are much less influenced by indoor and outdoor pressures.

Power venters with sidewall vents are a good alternative, when a vertical chimney is inadequate or non-existent. The power venter is located near the end of the vent and creates a negative draft

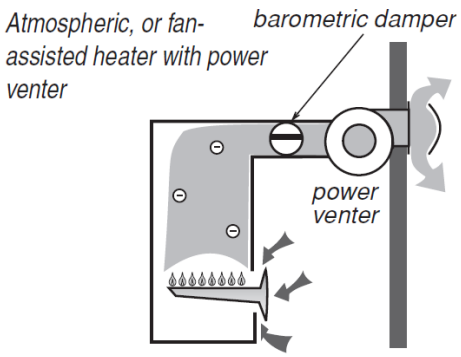


**Power-vent draft:** A power venter is an external draft-inducing fan that helps atmospheric, and fan-assisted furnaces, boilers, and water heaters vent through sidewall vents.

### 3.10.8.2 Worst-Case Draft and Pressure Test

This test uses the home's exhaust fans, air handler, and chimneys to create worst-case depressurization in the combustion-appliance zone (CAZ). A combustion appliance zone (CAZ) is an area containing one or more combustion appliances. During this worst-case testing, you measure chimney draft. Draft is the pressure difference between the chimney and combustion zone.
The reason for this test is that worst-case conditions do occur, and chimneys should vent their combustion gases even under these extreme conditions. The three main influences on worst-cast draft scenario are depressurization, chimney characteristics, and tightness of the home. This worst-case draft test will discover whether or not the venting system will exhaust the combustion gases when the combustion-zone pressure is as negative as you can make it. A digital manometer is usually used for accurate and reliable readings of chimney draft.

The BPI Technical Standards for a Building Analyst Professional provide the following procedure for testing the CAZ:

## COMBUSTION SAFETY TEST PROCEDURE FOR VENTED APPLIANCES

1. **Measure the Base Pressure.** Start with all exterior doors, windows, and fireplace damper(s) closed. Set all combustion appliances to the pilot setting or turn off the service disconnect, including: boiler, furnace, space-heaters, and water heater. With the home in this configuration, measure and record the base pressure of the combustion appliance zone (CAZ) WRT outside.
2. **Establish the Worst Case.** Turn on the dryer and all exhaust fans. Close interior doors that make the CAZ pressure more negative. Turn on the air handler, if present, and leave on if the pressure in the CAZ becomes more negative, then recheck the door positions. Measure the net change in pressure from the CAZ to outside, correcting for the base pressure. Record the "worst case depressurization" and compare to the CAZ Depressurization Limit Table.
3. **Measure Worst Case Spillage, Draft, CO.** Fire the appliance with the smallest Btu capacity first, test for spillage at the draft diverter with a mirror or smoke test, and test for CO at the flue at steady-state (if steady-state is not achieved within 10 minutes, take CO readings at the 10 minute mark). If the spillage test fails under worst-case go to step 4. If spillage ends within 1 minute, test the draft in the connector 1-2' after the diverter or first elbow. Fire all other connected appliances simultaneously and test the draft diverter of each appliance for spillage. Test for CO in all appliances in the flue, before the draft diverter.
4. **Measure Spillage, Draft, CO under Natural Conditions.** If spillage fails under worst case, turn off the appliance, the exhaust fans, open the interior doors, and allow the vent to cool before re-testing. Test for CO, spillage, and draft under "natural conditions". Measure the net change in pressure from worst case to natural in the CAZ to confirm the "worst case depressurization" taken in step 2. Repeat for each appliance, allowing the vent to cool between tests.
5. **Ambient CO.** Monitor the ambient CO in the breathing zone during the test procedure and abort the test if ambient CO goes over 35 ppm. Turn off the appliance, ventilate the space, and evacuate the building. The building may be reentered once ambient CO levels have gone below 35 ppm. The appliance must be repaired and the problem corrected prior to completing the combustion safety diagnostics. If the ambient levels exceed 35 ppm during testing under natural conditions, disable the appliance and instruct the homeowner to have the appliance repaired prior to operating it again.
6. **Action Levels.** Make recommendations or complete work order for repairs based on test results and the Combustion Safety Test Action Level Tables.

Building Performance Institute Technical Standards for the Building Analyst Professional, 02/28/05

### Acceptable Draft Test Ranges

| Outside Temperature (degree F) | Minimum Draft Pressure Standard (Pa) |
|---|---|
| <10 | -2.5 |
| 10-90 | (T_out ÷ 40) – 2.75 |
| >90 | -0.5 |

Building Performance Institute Technical Standards for the Building Analyst Professional, 02/28/05

**CAZ Depressurization Limits**

| Venting Condition | Limit (Pascals) |
|---|---|
| Orphan natural draft water heater (including outside chimneys) | -2 |
| Natural draft boiler or furnace commonly vented with water heater | -3 |
| Natural draft boiler or furnace with vent damper commonly vented with water heater | -5 |
| Individual natural draft boiler or furnace | -5 |
| Mechanically assisted draft boiler or furnace commonly vented with water heater | -5 |
| Mechanically assisted draft boiler or furnace alone, or fan assisted DHW alone | -15 |
| Exhausto chimney-top draft inducer (fan at chimney top);<br>High static pressure flame retention head oil burner;<br>Sealed combustion appliances; | -50 |

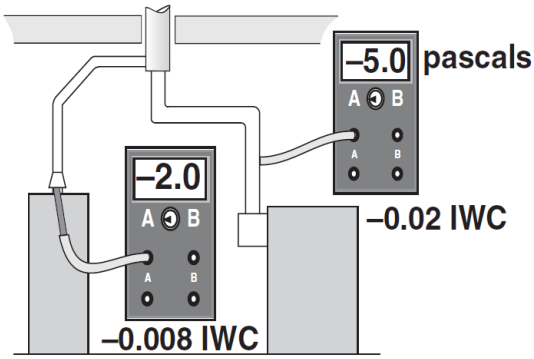


**Worst-case draft testing:** Measure draft for atmospheric gas appliances at worst-case conditions to ensure proper venting. Draft is measured on the chimney side of the draft diverter. For oil appliances, measure draft between the barometric draft control and the appliance.

### 3.10.8.3 Improving Inadequate Draft

If measured draft is below minimum draft pressures, investigate the reason for the weak draft. Open a window or door to observe whether the addition of combustion air will improve draft. If this added air strengthens draft, the problem usually is depressurization. If opening a window has no effect, inspect the chimney. The chimney could be blocked or excessively leaky. Consider implementing the following improvements in order to solve draft problems.

Chimney improvements

- Repair chimney obstructions, disconnections, or leaks, which can weaken draft.
- Measure the size of the vent connector and chimney and compare to vent-sizing information listed in Section 504 of the *International Fuel Gas Code*. A vent connector or chimney liner that is either too large or too small can result in poor draft.
- If wind is causing erratic draft, consider a wind-dampening chimney cap.
- If the masonry chimney is deteriorated, consider installing a new chimney liner.

Duct improvements

- Repair return-duct leaks near furnace.

- Isolate furnace from return registers by air sealing.
- Improve balance between supply and return air by installing new return ducts, transfer grills, or jumper ducts.

  Reducing depressurization from exhaust devices
- Isolate furnace from exhaust fans and clothes dryers by air sealing between the combustion zone and zones containing these depressurizing forces.
- Reduce capacity of large exhaust fans.

  Combustion and make-up air
- Provide make-up air for dryers and exhaust fans.
- Provide combustion-air inlet to combustion zone

#### 3.10.8.4 Pressure Balancing Forced-Air Systems.

Verify that the combustion appliance zone, where combustion heating appliances are located, are not depressurized by an operating forced air distribution system.

1. Activate the air handler by turning up the thermostat or by using the summer switch on the fan control if one exists.
2. Close the door from the living space to the basement or combustion appliance zone.
3. Using a digital pressure gauge, run a hose to the outside (through a crack in a door or around a basement window). Read the pressure difference of the combustion appliance zone with reference to outside.
4. If using a magnahelic, zero the gauge at 10 Pascals.
5. If the gauge reads negative, remedial actions must be taken to relieve the negative pressure (by sealing return leaks).

**Note:** Documentation of the pressure balance test must be included in the client file.

### 3.10.9 Venting Combustion Gases

Proper venting is essential to the operation, efficiency, safety and durability of combustion heaters. The National Fire Protection Association (NFPA) and the International Code Council (ICC) are the authoritative information sources on material-choice, sizing, and clearances for chimneys and vent connectors, as well as for combustion air. The information in this venting section is based on the following NFPA and ICC documents:

- The *2000 International Fuel Gas Code* (IFGC) (ICC)
- NFPA 31: *Standard for the Installation of Oil-Burning Equipment*
- NFPA 211: *Standard for Chimneys, Fireplaces, Vents, and Solid-Fuel-Burning Appliance*s

**Guide to Venting Standards**

| Topic | Standard and Section |
|---|---|
| Vent Sizing | IFGC, Section 504 |
| Clearances | IFGC, Section 308 and Tables 308.2l<br>NFPA 31, Section 4-4.1.1 and Tables 4-4.1.1 and 4-4.1.2<br>NFPA 211, Sections 6.5, 4.3, 5 |
| Combustion Air | IFGC, Section 304<br>NFPA 31, Section 1-9;<br>NFPA 211, Section 8.5 and 9.3 |

### 3.10.9.1 General Venting Requirements

Combustion gases are vented through vertical chimneys or other types of approved horizontal or vertical vent piping. Identifying the type of existing venting material, verifying the correct size of vent piping, and making sure the venting conforms to the applicable codes are important tasks in inspecting and repairing venting systems. Oversized vents can lead to condensation and corrosion while undersized vents may result in spillage. The wrong vent materials can corrode or deteriorate from heat.

### 3.10.9.2 Vent Connectors

A vent connector connects the appliance's venting outlet with the chimney. Approved vent connectors for gas- and oil-fired units are made from the following materials.

1. Type-B vent, consisting of a galvanized-steel outer pipe and aluminum inner pipe (≥ 0.027 inch thick)
2. Type-L vent connector with a stainless-steel inner pipe and either galvanized or black-steel outer pipe.
3. Galvanized-steel pipe (≥ 0.018 inch thick)
4. Aluminum pipe (0.012 inch thick)
5. Stainless-steel pipe (≥ 0.012 inch thick)
6. Various manufactured vent connectors

Double-wall vent connectors are the best option, especially for appliances with horizontal sections of vent connector. A double-wall vent connector helps maintain flue-gas temperature and prevent condensation. Gas appliances with draft hoods, installed in attics or crawl spaces must use a Type-B vent connector. Type-L vent pipe is commonly used for vent connectors for oil and solid fuels but can also be used for gas.

Observe the following general specifications, concerning vent connectors:

- A vent connector is almost always the same size as the vent collar on the appliance it vents.
- Vent-pipe sections should be fastened together with 3 screws or rivets.
- The vent connector should be sealed where it enters the chimney.

- Vent connectors should be free of rust, corrosion and holes.
- The chimney combining two vent connectors should have a cross-sectional area equal to the area of the larger vent connector plus half the area of the smaller vent connector.
- The common vent should be no larger than 7 times the area of the smallest vent. For specific vent sizes, see NFPA codes themselves listed in "Guide to Venting Standards" in Section 3.10.9.

***Areas of Round Vents***

| Vent diameter | 4" | 5" | 6" | 7" | 8" |
|---|---|---|---|---|---|
| Vent area (square inches) | 12.6 | 19.6 | 28.3 | 38.5 | 50.2 |

- The horizontal length of vent connectors shouldn't be more than 75% of the chimney's vertical height or have more than 18 inches horizontal run per inch of vent diameter.
- Vent connectors must have upward slope to their connection with the chimney. A slope of $^1/_4$ inch of rise per foot of horizontal run along their entire length is recommended to prevent condensation from pooling and rusting the vent.

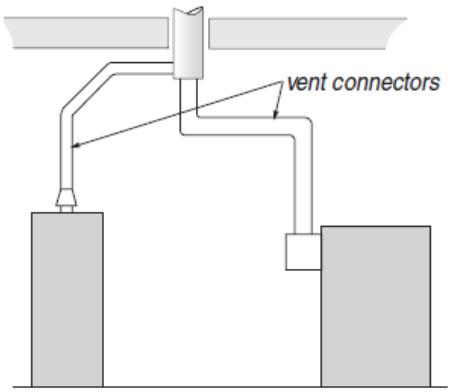


**Two vent connectors joining chimney:** The water heater's vent connector enters the chimney above the furnace because the water heater has a smaller input.

***Vent Connector Diameter (in.) and Maximum Horizontal Length (ft.)***

| 3" | 4" | 5" | 6" | 7" | 8" | 9" | 10" | 12" | 14" |
|---|---|---|---|---|---|---|---|---|---|
| 4.5' | 6' | 7.5' | 9' | 10.5' | 12' | 13.5' | 15' | 18' | 21' |

From *International Fuel Gas Code 2000*

- When two vent connectors connect to a single chimney, the vent connector servicing the smaller appliance should enter the chimney above the vent for the larger appliance.
- Clearances for common vent connectors are listed here.

## *Clearances to Combustibles for Common Vent Connectors*

| Vent Connector Type | Clearance |
|---|---|
| Single-wall galvanized-steel vent pipe | 6" (gas)<br>18" (oil) |
| Type-B double-wall vent pipe (gas) | 1" (gas) |
| Type L double wall vent pipe (stainless steel inner liner, stove pipe or galvanized outer liner) | 9", or 1 vent diameter, or as listed |

### 3.10.10 Chimneys

There are two common types of vertical chimneys for venting combustion fuels that satisfy NFPA and ICC codes. First there are masonry chimneys lined with fire-clay tile, and second there are manufactured metal chimneys, including all-fuel metal chimneys and Type-B vent chimneys for gas appliances.

**Masonry chimneys**

Observe the following general specifications for inspecting, repairing, and retrofitting masonry chimneys.

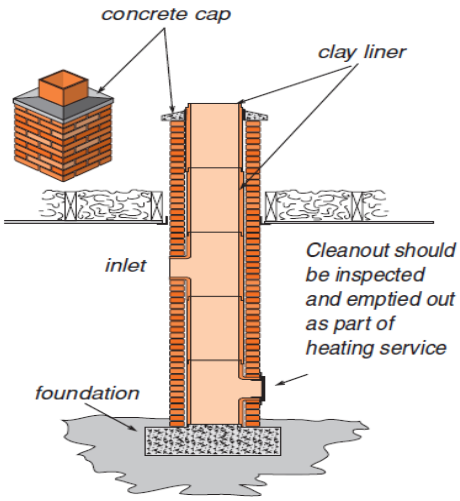


**Masonry chimneys:** Remain a very common vent for all fuels.

Masonry chimneys should be supported by their own masonry foundation.
Existing masonry chimneys should be lined with a fireclay flue liner. There should be a $^{1}/2$-inch to 1-inch air gap between the clay liner and the chimney's masonry to insulate the liner. The liner shouldn't be bonded structurally to the outer masonry because it needs to expand and contract independently of the chimney's masonry structure. The clay liner can be sealed to the chimney cap with a flexible high-temperature sealant.

The chimney's penetrations through floors and ceilings should be sealed with metal as a firestop and air barrier.

Deteriorated or unlined masonry chimneys may be rebuilt as specified above or relined as part of a heating-system replacement or a venting-safety upgrade. As an alternative, the vertical chimney may be replaced by a sidewall vent, equipped with a power venter mounted on the exterior wall.

***Clearances to Combustibles for Common Chimneys***

| Chimney Type | Clearance |
|---|---|
| Interior chimney masonry w/ fireclay liner | 2" |
| Exterior masonry chimney w/ fireclay liner | 1" |
| All-fuel metal vent: insulated double wall or triple-wall pipe | 2" |
| Type B double-wall vent (gas only) | 1" |

- Masonry chimneys should have a cleanout 12 inches or more below the lowest inlet. Mortar and brick dust should be cleaned out of the bottom of the chimney through the clean-out door, so that this debris won't eventually interfere with venting.

#### 3.10.10.1.1 Manufactured Chimneys

Manufactured metal chimneys have engineered parts that fit together in a prescribed way. Metal chimneys have all manufactured components from the vent connector to the termination fitting on the roof. Parts include: metal pipe, weight-supporting hardware, insulation shields, roof jacks, and chimney caps. One manufacturer's chimney may not be compatible with another's connecting fittings.

All-fuel metal chimneys come in two types: insulated double wall metal pipe and triple-wall metal pipe. Install them strictly observing the manufacturer's specifications.

**All-fuel metal chimney:** These chimney systems include transition fittings, support brackets, roof jacks, and chimney caps. The pipe is double-wall insulated or triple wall.

Type-B vent pipe is permitted as a chimney for gas appliances. Some older manufactured gas chimneys were made of metal-reinforced asbestos cement.

#### 3.10.10.1.2 Chimney Termination

Masonry chimneys and all-fuel metal chimneys should terminate at least three feet above the roof penetration and two feet above any obstacle within ten feet of the chimney outlet. Chimneys should have a cap to prevent rain and strong downdrafts from entering.

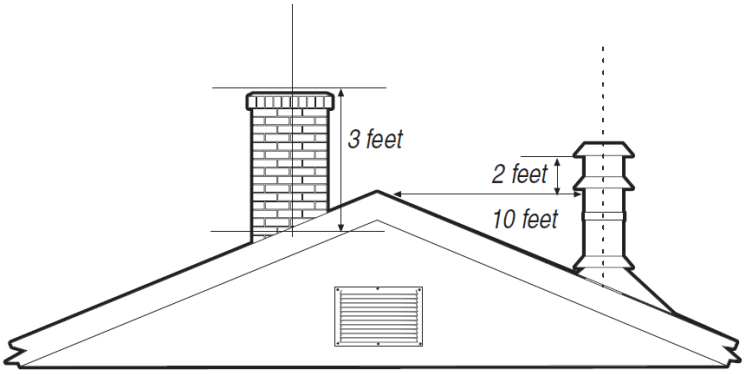


**Chimney terminations:** Should have vent caps and be given adequate clearance height from nearby building parts. These requirements are for masonry chimneys and manufactured all-fuel chimneys.

B-vent chimneys can terminate as close as one foot above flat roofs and pitched roofs up to a $^{6}/_{12}$ roof pitch. As the pitch rises, the minimum termination height rises as shown in the table.

***Roof Slope and B-Vent Chimney Height (feet) Above Roof***

| flat-6/12 | 6/12-7/12 | 7/12-8/12 | 8/12-9/12 | 9/12-10/12 | 10/12-11/12 | 11/12-12/12 | 12/12-14/12 | 14/12-16/12 | 16/12-18/12 |
|---|---|---|---|---|---|---|---|---|---|
| 1' | 1' 3" | 1' 6" | 2' | 2' 6" | 3' 3" | 4' | 5' | 6' | 7' |

From *International Fuel Gas Code 2000*

#### 3.10.10.1.3 Metal Liners for Masonry Chimneys

Unlined masonry chimneys or chimneys with deteriorated liners should be relined as part of heating system replacement. Use either Type-B vent, a flexible or rigid stainless-steel liner, or a flexible aluminum liner.

Flexible liners require careful installation to avoid a low spot at the bottom, where the liner turns a right angle to pass through the wall of the chimney. Follow the manufacturer's instructions, which usually prescribe stretching the liner and fastening it securely at both ends, to prevent it from sagging and thereby creating such a low spot.

To reduce condensation, flexible liners should be insulated—especially when installed in exterior chimneys. Consider insulating flexible metal chimney liners with vermiculite or a fiberglass-insulation jackets, if the manufacturer's instructions allow.

Sizing flexible chimney liners correctly is very important. Over-sizing is common and can lead to condensation and corrosion. The manufacturers of the liners include vent-sizing tables in their instructions. Liners should bear the label of a testing lab like Underwriters Laboratories (UL).

### 3.10.10.2 Special Venting Considerations for Gas

The American Gas Association (AGA) has devised a classification system for venting systems serving natural gas and propane appliances. This classification system assigns Roman numerals to four categories of venting based on whether there is positive or negative pressure in the vent and whether condensation is likely to occur in the vent.

| | Negative-pressure Venting | Positive-pressure Venting |
|---|---|---|
| Non-condensing | **I**<br>Combustion Efficiency<br>**83% or less**<br>Use standard venting: masonry or Type B vent | **III**<br>Combustion Efficiency<br>**83% or less**<br>Use only pressurizable vent as specified by manufacturer |
| Condensing | **II**<br>Combustion Efficiency<br>**over 83%**<br>Use only special condensing-service vent as specified by manufacturer | **IV**<br>Combustion Efficiency<br>**over 83%**<br>Use only pressurizable condensing-service vent as specified by manufacturer |

American Gas Association Vent Categories

The AGA classifies venting by whether there is positive or negative pressure in the vent and whether condensation is likely.

A great majority of appliances found in homes and multifamily buildings are Category I, which have negative pressure in vertical chimneys with no condensation expected in the vent connector or chimney. Condensing furnaces are usually Category IV with positive pressure in their vent and condensation occurring in both the appliance and vent.

#### 3.10.10.2.1 Venting Fan-Assisted Furnaces and Boilers

Newer gas-fired fan-assisted central heaters control flue-gas flow and excess air better than atmospheric heaters, resulting in their higher efficiency. These are non-condensing Category I furnaces in the 80%-plus Annual Fuel Utilization Efficiency (AFUE) range. Because these units eliminate dilution air and have slightly cooler flue gases, chimneys should be carefully inspected to ensure that they are ready for a possibly more corrosive flue-gas flow. The chimney should be relined when any of the following three conditions are present.

- When the existing masonry chimney is unlined.
- When the old clay or metal chimney liner is deteriorated.
- When the new heater has a smaller input than the old one. In this case the new chimney should be sixed to the new furnace or boiler and the existing water heater.

For gas-fired 80+ AFUE furnaces, a chimney liner should consist of:

- Type-B vent
- A rigid or flexible stainless steel liner
- A poured masonry liner
- An insulated flexible aluminum liner

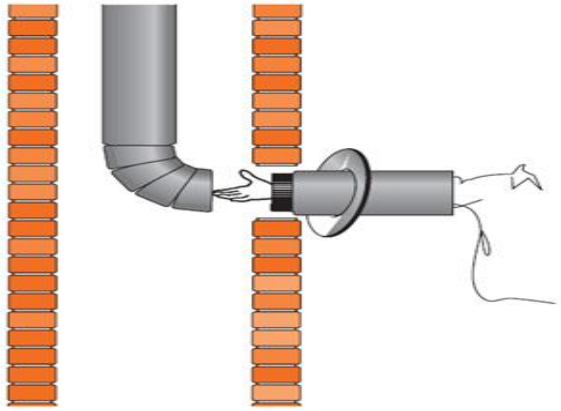

**B-vent chimney liner:** Double-wall Type-B vent is the most commonly available chimney liner and is recommended over flexible liners. Rigid stainless-steel single-wall liners are also a permanent solution to deteriorated chimneys.

Because of the considerable expense that chimney relining can entail, sidewall venting with a power venter should be considered.

***Characteristics of Gas Furnaces and Boiler***

| AFUE | Operating characteristics |
|---|---|
| 70+ | Category I, draft diverter, no draft fan, standing pilot, non-condensing, indoor combustion and dilution air |
| 80+ | Category I, no draft diverter, draft fan, electronic ignition, indoor combustion air |
| 90+ | Category IV, no draft diverter, draft fan, low-temperature plastic venting, positive draft, electronic ignition, condensing heat exchanger, outdoor combustion air is strongly recommended |

#### 3.10.10.2.2 Pressurized Sidewall Vents

Sometimes, the manufacturer gives the installer a venting choice of whether to install a fan-assisted furnace or boiler into a vertical chimney (Category I) or as a positive-draft appliance (Category III), vented through a sidewall vent. Sidewall-vented fan-assisted furnaces and boilers may vent through B-vent, stainless-steel single-wall vent pipe, or high-temperature plastic pipe. Pressurized sidewall vents should be virtually airtight at the operating draft. B-vent must be sealed with high-temperature silicone caulking or other approved means to air-seal its joints.

Some high-temperature positive-draft plastic vent pipe, used in horizontal installations, was recalled by manufacturers because of deterioration from heat and condensation. Deteriorated high-temperature plastic vent should be replaced by airtight stainless-steel vent piping or B-vent.

Existing fan-assisted appliances may have problems with weak draft and condensation when vented horizontally. Horizontally vented, fan-assisted furnaces and boilers may require a retrofit power venter to create adequate draft.

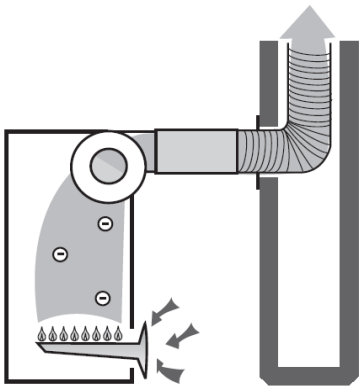

**Fan-assisted gas heaters with vertical chimneys:** These 80% AFUE central heaters are almost always vented into atmospheric chimneys, which may need to be relined.

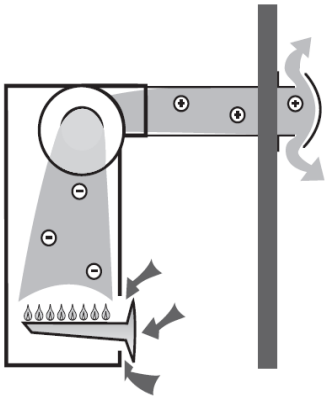

**Fan assisted heaters with sidewall vents:** Sometimes these appliances are vented through a side wall through airtight plastic or stainless-steel vent pipe.

#### 3.10.10.2.3 Condensing-Furnace Venting

Condensing furnaces with 90+ AFUE are vented horizontally or vertically through PVC Schedule 40 pipe. The vent is pressurized, making it Category IV. Vent piping should be sloped in a manner so the appliance condensate drain can operate as designed. All high efficiency furnaces must have a dedicated source for combustion intake air.

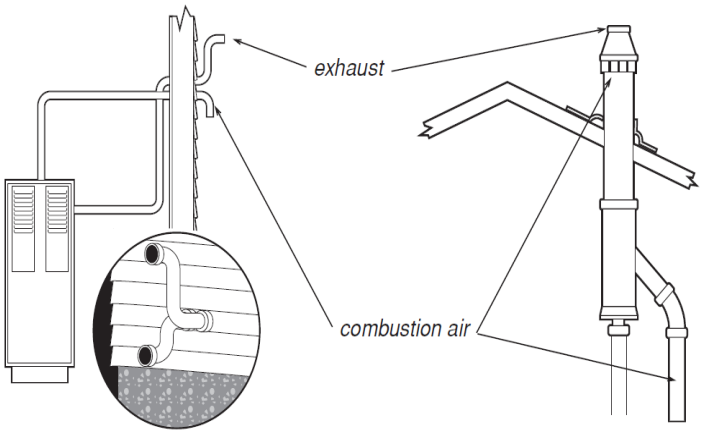


**Condensing furnace venting:** The two common types of termination for plastic condensing vents are separate pipes and a combined fitting. Vents going through the roof are preferred for their being more resistant to tampering and damage.

Combustion air is supplied from outdoors through a sealed plastic pipe (PVC) or from indoors. Outdoor combustion air is highly recommended, and most condensing furnaces are equipped for outdoor combustion air through a dedicated pipe. This combined combustion-air and venting system is referred to as direct-vent or sealed-combustion.

#### 3.10.10.3 Power Venters for Sidewall Venting

Power venters are installed just inside or outside an exterior wall and are used for sidewall venting. Power venters create a stable negative draft. Many power venters allow precise control of draft through air controls on the fans. Barometric draft controls can also provide good draft control when installed either on the common vent for two-appliances or on the vent connector for each appliance. This more precise draft control, provided by the power venter and/or barometric damper, minimizes excess combustion and dilution air. Flue gas temperatures for power venters can be cooler than temperatures needed to power vertical atmospheric chimneys. Less excess air and cooler flue gases can improve combustion efficiency in many cases, compared to the non-adjustable draft of a vertical chimney. However, the power venter must be installed by a technician familiar with adjusting the draft to each appliance.
A single power venter can vent both a furnace or boiler and also a water heater. Types B or L vents are good choices for horizontal vent piping. Use Type B for gas only.

A single power venter can vent both a furnace or boiler and also a water heater. Types B or L vents are good choices for horizontal vent piping. Use Type B for gas only.

Power venters should be considered as a venting option when:

- Wind, internal house pressures, or nearby buildings have created a stubborn drafting problem that other options can't solve.
- An existing horizontally vented appliance has weak draft and/or condensation problems.
- Clients who currently heat with electricity want to convert to gas space heating and water heating but have no chimney.
- The cost of lining an unlined or deteriorated chimney exceeds the cost of installing a power venter with its horizontal vent.
- A floor furnace or other appliance with a long horizontal vent connector has back-drafting problems.
- A water heater is orphaned in a too-large vertical chimney when the new furnace or boiler is vented through a plastic (PVC) venting system.
- High draft in the existing vertical chimney is creating unstable combustion or low steady-state efficiency in the appliances connected to it.

#### 3.10.10.4 Mobile-Home Furnace Venting

Mobile homes require furnaces designed and approved for use in mobile homes. Mobile-home furnaces are direct-vented, sealed-combustion units that require an outdoor source of combustion air. Mobile-home furnaces may be atmospheric (no draft fan) or fan-assisted. The fan may draw combustion air from a concentric space created by the double-wall chimney or from a duct connected to the ventilated crawl space. Mobile-home furnaces often have a manufactured chimney that includes a passageway for admitting outdoor combustion air supply.

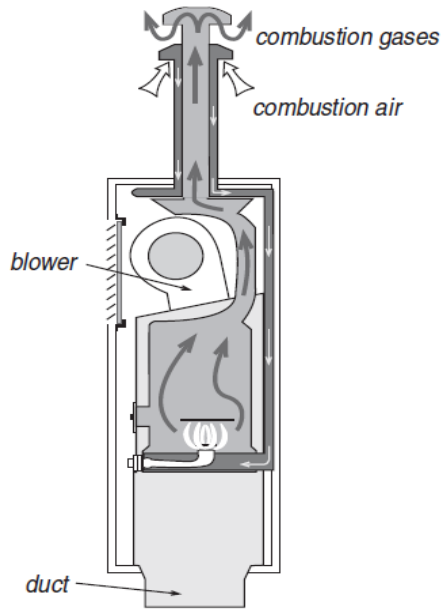


**Mobile home furnace venting:** Mobile home chimneys and chimney caps must be installed perfectly vertical and the cap must be securely attached to avoid venting problems and tripping of the pressure switch.

When replacing standard mobile-home furnaces, note the differences between the old furnace and new in the way each supplies itself with combustion air and follow manufacturer's installation instructions exactly. The chimney assembly must often be replaced when the furnace is replaced. The roof jack may need to be replaced, and the hole for the chimney moved. It is essential that the chimney be vertical and that the chimney cap not be tipped. Many callbacks are caused by chimney and chimney-cap alignment.

One corporation makes down flow condensing furnaces approved for use in mobile homes. These positive-draft furnaces may eliminate venting and combustion-air problems, common to mobile home furnaces, because of their robust positive draft and negatively pressurized combustion-air vent.

#### 3.10.10.5 Wood-Heating Venting and Safety

Wood heating is a popular and effective auxiliary heating source for homes. However, wood stoves and fireplaces can cause indoor-air-pollution and fire hazards. As part of health and safety work, it's important to inspect wood stoves to assess potential hazards.

Stoves that are listed by a testing agency like Underwriters Laboratory have a tag stating their clearance from combustibles. Unlisted stoves should conform to the minimum clearances shown here. Ventilated wall protectors, described in NFPA codes and standards, generally allow the listed clearance to be reduced by half.

All components of wood-stove venting systems should be approved for use with wood stoves. Chimney sections penetrating floor, ceiling, or roof should have approved thimbles, support packages, and ventilated shields to protect combustible materials from high temperatures.

- Inspect stove, vent connector, and chimney for correct clearances from combustible materials as listed in NFPA 211. Ensure that stove is sitting on a noncombustible floor.
- Inspect vent connector and chimney for leaks, and have leaks sealed with a high-temperature sealant designed for use with metal or masonry.
- Inspect chimney and vent connector for creosote build-up, and have chimney cleaned if creosote build-up exists.
- Inspect the house for soot on seldom-cleaned horizontal surfaces. If soot is present or if the blower door indicates leakage, inspect and have the gasket on the wood-stove door replaced if appropriate. Have other air leaks sealed, and take steps to improve draft as necessary, to reduce indoor smoke emissions.
- Inspect stack damper and/or combustion air intake and have cleaned if necessary.
- Check catalytic combustor for repair or replacement if the wood stove has one.
- Assure that heat exchanger surfaces and flue passages within the wood stove are free of accumulations of soot or debris.

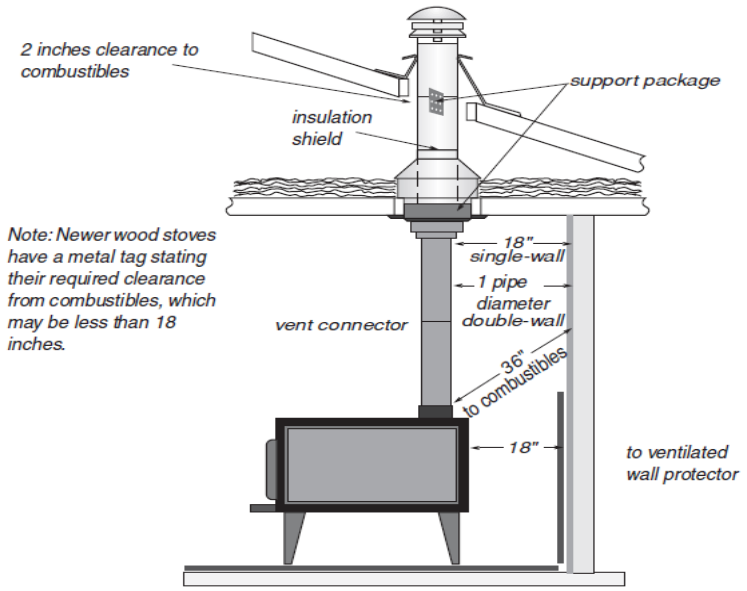


**Wood-stove installation:** Wood-stove venting and clearances are vitally important to wood-burning safety. Read and follow all manufacturer's instructions for the stove and its venting components.

### 3.10.11 Combustion Air

Combustion appliances need a source of combustion air while they are operating. The exception to this rule is sealed-combustion or direct-vent appliances, which bring in their own outdoor air through a dedicated pipe. Common combustion-air and venting problems, combined with the complexity of codes and recommendations on combustion air argue strongly in favor of installing direct-vent appliances.

A combustion-air source must deliver between 17 cfm and 600 cfm. The lower end of this scale represents small furnaces and space heaters, and the upper end represents wood-burning fireplaces or large boilers in multifamily buildings.

*CFM Air Requirements for Combustion Furnaces or Boilers*

| Appliance | Combustion Air (cfm) | Dilution Air (cfm) |
|---|---|---|
| Conventional Oil | 38 | 195 |
| Flame-Retention Oil | 25 | 195 |
| High-Efficiency Oil | 22 | – |
| Conventional Atmospheric Gas | 30 | 143 |
| Fan-Assisted Gas | 26 | – |
| Condensing Gas | 17 | – |
| Fireplace (no doors) | 100–600 | – |
| Airtight Wood Stove | 10–50 | – |

*A.C.S. Hayden, Residential Combustion Appliances: Venting and Indoor Air Quality Solid Fuels Encyclopedia*

The goal of assessing combustion air is to verify that there is an adequate supply, and to ensure that a combustion-air problem isn't creating CO or interfering with combustion.
A combustion appliance zone (CAZ) is an area containing one or more combustion appliances. Combustion appliance zones are classified as either un-confined spaces or confined spaces. Un-confined spaces are open or connected to enough building volume and air leakage to provide combustion air. For un-confined spaces, combustion air comes from leaks within the combustion zone. Confined spaces are combustion zones with a closed door and sheeted walls and ceiling that create an air barrier between the appliance and other indoor spaces. For confined spaces, combustion air must come from outside the combustion zone. A relatively airtight home is itself a confined space and must bring combustion air in from outdoors.

Combustion air is supplied to the combustion appliance in four ways.

1. To an un-confined space through leaks in the building.
2. To a confined space through an intentional opening or openings between the CAZ and other indoor areas where air leaks replenish combustion air.
3. To a confined space through an intentional opening or openings between the CAZ and outdoors or ventilated intermediate zones like attics and crawl spaces.
4. Directly from the outdoors to the combustion appliance through a duct. Appliances with direct combustion-air ducts are called sealed-combustion or direct-vent appliances.

#### 3.10.11.1 Un-Confined-Space Combustion Air

Combustion appliances located in most basements, attics, and crawl spaces get adequate combustion air from leaks in the building shell. Even when a combustion appliance is located within the home's living space, it usually gets adequate combustion air from air leaks unless the house is airtight or the combustion zone is depressurized.

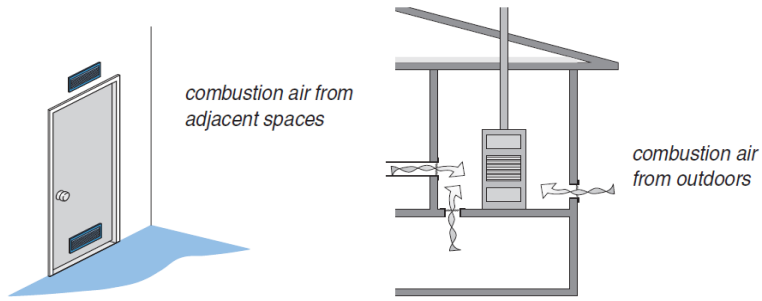


**Passive combustion-air options:** Combustion air can be supplied from adjacent indoor spaces or from outdoors. Two openings into the combustion zone are preferred

### 3.10.11.2 Confined-Space Combustion Air

A combustion appliance located in a confined space, surrounded by materials that are relatively effective air barriers, may need a vent connecting it to an adjacent indoor area, a crawl space, or outdoors. A confined space is defined by the IFGC as a room containing one or more combustion appliances that has less than 50 cubic feet of volume for every 1000 Btu per hour of appliance input.

However, the code definition aside, if the mechanical room is connected to adjacent spaces through large air passages like floor-joist spaces, the combustion appliance zone is not actually a confined space even though it has a door separating it from other indoor spaces. This connection between the combustion zone and other spaces could be confirmed by pressure testing. On the other hand, if the home is unusually airtight, the combustion zone may be unable to provide adequate combustion air, even when the combustion zone is larger than the minimum confined-space room volume, defined earlier.

Combustion air from adjacent indoor spaces is usually preferred over outdoor combustion air because of the possibility of wind depressurizing the combustion zone. However, if there is a sheltered outdoor space from which to draw combustion air, this can be a superior choice. Outdoor air is generally cleaner and dryer than indoor air, and a connection to the outdoors makes the confined space less affected by indoor pressure fluctuations.

For every 1,000 Btu/hour input, a combustion-air vent to another indoor space should have a total of 2 square inches ($in^2$) of net free area. Net free area is smaller than actual vent area and takes the blocking effect of louvers into account. Metal grills and louvers provide 60% to 75% of their area as net free area while wood louvers provide only 20% to 25%.

Here is an example of sizing combustion air to another indoor area. The furnace and water heater are located in a confined space. The furnace has an input rating of 100,000 Btu/hour. The water heater has an input rating of 40,000 Btu/hour. Therefore, there should be 280 $in^2$ of net free area of vent between the mechanical room and other rooms in the home. ([100,000 + 40,000] ÷ 1,000 = 140 x 2 $in^2$ = 280 $in^2$).

#### 3.10.11.2.1 Combustion-Air Vent Location

In confined spaces or airtight homes where outdoor combustion air is needed, prefer low vents to high ones. A combustion-air vent into an attic may depressurize the combustion zone in some cases because the attic tends to be a depressurized zone where air is being exhausted. Instead, connect the

combustion zone to a ventilated crawl space or directly to outdoors. The vent opening should have one square inch (1 $in^2$) of net free area for each 3000 Btu/hour of appliance input.

Choose an outdoor location that is sheltered, where the wall containing the vent isn't parallel to prevailing winds. Wind blowing parallel to an exterior wall and at a right angle to the vent opening tends to de-pressurize both the combustion-air opening and the CAZ connected to it. Indoors, locate combustion air vents away from water pipes to prevent freezing in cold climates.

### 3.10.11.3 Proprietary Combustion-Air Systems

Any passive combustion-air inlet can potentially depressurize the combustion zone because pressure from wind or stack effect can extract air from the combustion zone instead of supplying air. Several proprietary systems are available that offer superior assurance of adequate combustion air compared to passive vents. These systems are particularly appropriate in confined areas suffering from: stubborn draft problems, combustion-zone depressurization, inadequate combustion-air, or a combination of these problems.

#### 3.10.11.3.1 Direct Combustion-Air Supply

Many new combustion appliances are designed for direct outdoor-air supply to the burner. These include most condensing furnaces, mobile home furnaces, mobile home water heaters, many space heaters, and some non-condensing furnaces and boilers. Some appliances give installers a choice between indoor and outdoor combustion air. Outdoor combustion air is usually preferable in order to prevent the depressurization problems, combustion-air deficiencies, and draft problems.

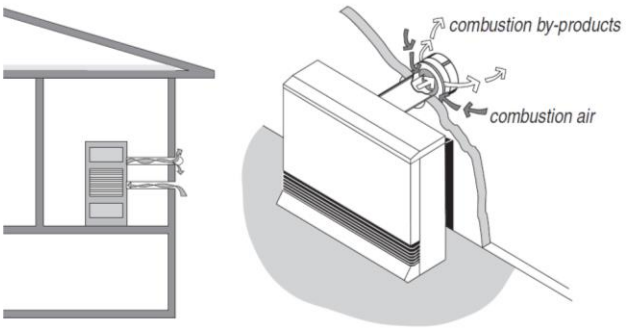


**Sealed combustion:** Sealed combustion appliances draw combustion air in and exhaust combustion by-products, either using a draft fan or by pressure differences created by the fir

#### 3.10.11.3.2 Fan-Powered Combustion Air

At least one company manufactures a proprietary combustion-air system that introduces outdoor air through a fan that sits on the floor and attaches to a combustion-air duct to outdoors.

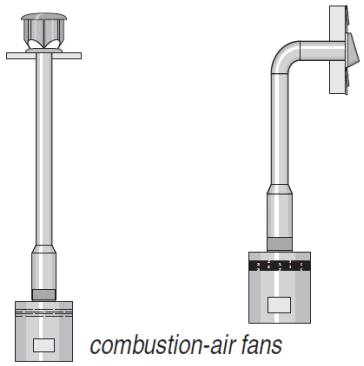


**Fan-powered combustion air:** Fans for supplying combustion air can help solve stubborn combustion air and drafting problems.

#### 3.10.11.3.3 Direct Combustion Air Supply to Oil-Fired Heaters

Oil furnaces and boilers can be either purchased new or may be retrofitted with a sealed combustion-air and venting system. The burner fan is fitted with an air boot that feeds the burner with outdoor air. The amount of outdoor air fed to the burner is usually regulated by a barometric draft control.

#### 3.10.11.3.4 Combustion Air Combined with Power Venting

Both gas- and oil-fired heating systems can be supplied with combustion air by proprietary systems that combine power venting with powered combustion-air supply. The combustion air simply flows into the combustion zone from outdoors, powered by the power venter. If the appliance has a power burner, like a gun-type oil burner, a boot may be available to supply combustion air directly to the burner as shown here.

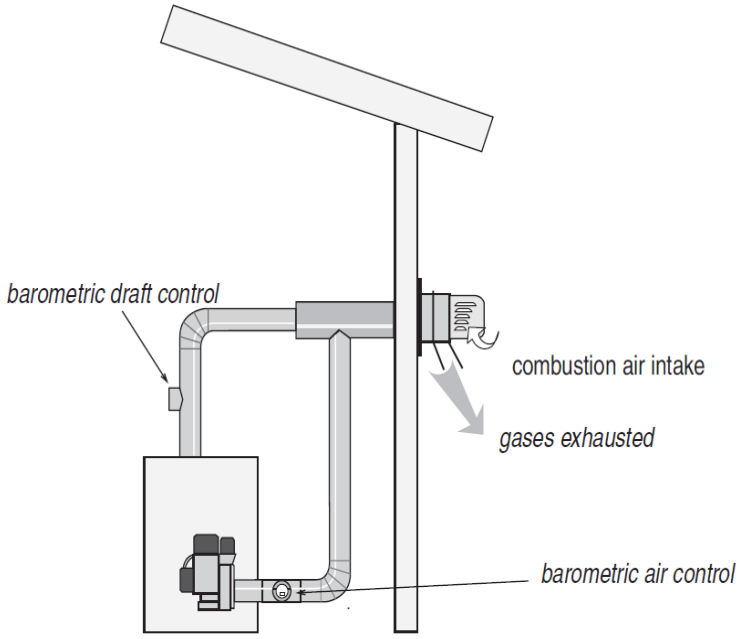


**Sealed-combustion, oil-heating retrofit:** Direct supply of combustion air to gun-type oil burners is a good option for shielding the oil burner from house pressures.

### 3.10.12 Forced-Air System Standards

The overall system efficiency of an oil or gas forced-air heating system is affected by blower operation, duct leakage, balance between supply and return air, and duct insulation levels. Retrofits to the forced-air system generally are more cost effective than retrofits to the heating unit itself.

#### 3.10.12.1.1 Inspecting Furnace Heat Exchangers

Leaks in heat exchangers are a common problem, causing the flue gases to mix with house air. Ask clients about respiratory problems, flue-like symptoms, and smells in the house when the heat is on. Also, check around supply registers for signs of soot, especially with oil heating. All furnace heat exchangers should be inspected as part of weatherization. Consider using one or more of the following 7 general options for evaluating heat exchangers.

1. Look for rust at exhaust ports and vent connector.
2. Look for flame impingement on the heat exchanger during firing.
3. Observe flame movement, change in chimney draft, or change in CO reading as blower is turned on and off.
4. Look for flame-damaged areas near the burner flame.
5. Measure the flue-gas oxygen concentration before the blower starts and just after it has started. There should be no more than a 1% change in the oxygen concentration.
6. Examine the heat exchanger, shining a bright light on one side and looking for light traces on the other using a mirror to peer into tight locations.
7. Employ chemical detection techniques, following manufacturer's instructions.

Heat exchangers with large leaks should always be replaced.

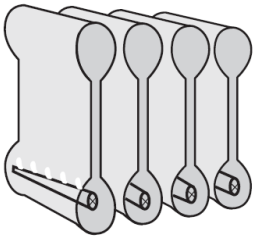

**Furnace heat exchangers:** Although no heat exchanger is completely airtight, it should not leak enough to display the warning signs described here.

### 3.10.12.2 Furnace operating standards

The effectiveness of a furnace depends on its heat rise and flue-gas temperature. For efficiency you want a low heat rise and low flue-gas temperature. However, you must maintain a minimum flue-gas temperature to prevent corrosion in the venting. Apply the following furnace-operation standards to maximize the heating system's seasonal efficiency and safety.

- Check heat rise after 5 minutes of operation. Refer to manufacturer's nameplate for acceptable heat rise (supply temperature minus return temperature). The heat rise should be between 40°F and 90°F with the lower end of this scale being preferable for energy efficiency.
- All forced-air heating systems must deliver supply air and collect return air only within the intentionally heated portion of the house. Taking return air from an un-heated area of the house such as an unoccupied basement is not acceptable.

***Furnace Operating Parameters***

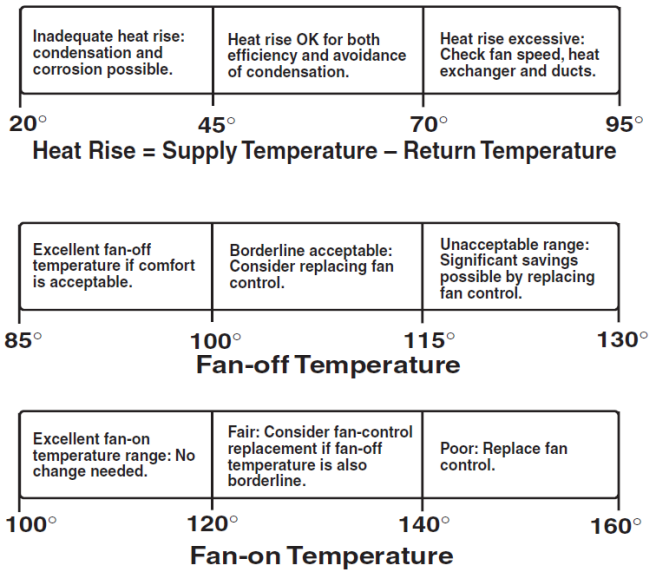

- The fan-off temperature should be between 90° and 100° F, with the lower end of the scale being preferable for maximum efficiency.
- The fan-on temperature should be no less than 100° F.
- The high-limit controller should shut the burner off before the furnace temperature reaches 200°F.
- On time-activated fan controls, verify that the fan is switched on within two minutes of burner ignition and is switched off within 2.5 minutes of the end of the combustion cycle.

If the heating system does not conform to these standards, consider the following improvements:

- Clean or change dirty filters
- Clean the blower, increase fan speed, and improve ducted air circulation.
- Adjust fan control to conform to the above standards, or replace the fan control if adjustment fails. Many fan controls on modern furnaces aren't adjustable.
- Adjust the high-limit control to conform to the above standards, or replace the high-limit control.

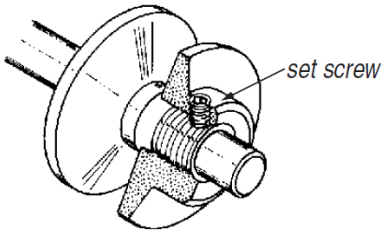


**Adjustable drive pulley:** This adjustable pulley moves back and forth allowing the belt to ride higher or lower, adjusting the blower's speed.

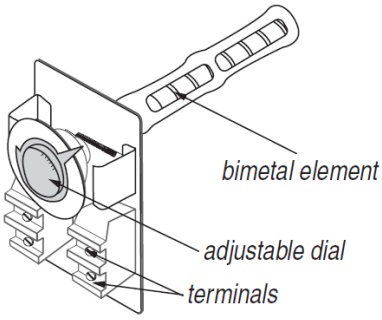


**Fan/limit control:** Turns the furnace blower on and off, according to temperature. Also turns the burner off if the heat exchanger gets too hot (high limit).

### 3.10.12.3 Improving Duct-System Airflow

Inadequate airflow is a common cause of comfort complaints. The airflow capacity of the air handler may be evaluated in relationship to the capacity of the furnace or air conditioner. For combustion furnaces, there should be 110-to-150 cfm of airflow for each 10,000 Btuh of output. Central air conditioners and heat pumps should deliver 400 cfm of airflow per ton of cooling capacity.

When the air handler is on there should be a strong flow of air out of each supply register, providing its balancing damper is open. Low airflow may mean that a branch is blocked or separated, or that return air is not sufficient. When low airflow is a problem, consider the following obvious improvements.

- Clean or change filter.
- Clean furnace blower.
- Clean air-conditioning or heat pump coil. (If the blower is dirty, the coil is probably also dirty.)
- Increase blower speed.
- Lubricate blower motor, and check tension on drive belt.
- Repair or replace bent, damaged, or restricted registers.

#### 3.10.12.3.1 Filter and Blower Maintenance

A dirty filter can reduce airflow significantly. If required, take the following action to prevent filter-caused airflow restriction by the following steps:

- Install a filter whistle that indicates when the filter is dirty.
- Insure that filters are easy to change or clean.
- Stress to the client the importance of changing or cleaning filters, and suggest to the client a regular filter-maintenance schedule.
- Clean the blower. This task involves removing the blower and removing dirt completely with a brush or water spray.
- Special air-cleaning filters offer more resistance than standard filters, especially when saturated with dust. Avoid using them, unless you test for airflow after installation.
- Measure the current draw of the blower motor in amps. If the amp measurement exceeds the motor amp rating by more than 10%, replace the motor.

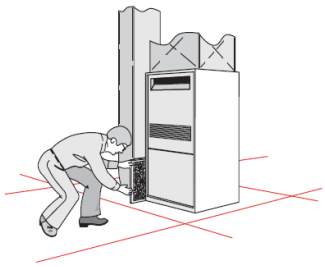

*Panel filter installed in filter slot in return plenum*

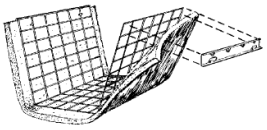

*Washable filter installed on a rack inside the blower compartment*

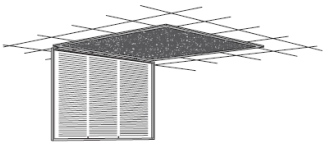

*Panel filter installed in return register*

**Furnace filter location:** Filters are installed on the return-air side of forced air systems. Look for them in one or more of the following places.

#### 3.10.12.3.2 Duct Improvements to Increase Airflow and Improve Comfort

Consider the following improvements in response to customer complaints and conditions you observe during a thorough duct inspection. Unbalanced airflow through ducts can pressurize or depressurize rooms, leading to increased air leakage through the building shell. Consider the following duct changes to increase system airflow and reduce the imbalance between supply and return.

- Remove obstructions to registers and ducts such as rugs, furniture, and objects placed inside ducts, like children's toys and water pans for humidification.
- Remove kinks from flexible duct, and replace collapsed flexible duct and fiberglass duct board.
- Install additional supply ducts and return ducts as needed to provide heated air throughout the building, especially into additions to the building. If the addition(s) are 25% of the area to be heated, evaluate the cost effectiveness between installing a vented space heater (if there is fuel available) vs. running new supply ducts. Also note that the existing blower may not be able to handle the additional load.
- Install a transfer grille between the bedroom and main body of house to improve airflow.
- Undercut bedroom doors, especially in homes with single return registers.
- Retrofit jumper ducts, composed of one register in the bedroom, one register in the central return-air zone, and a duct in between (usually running through an attic or crawl space).
- Install registers and grilles where missing.

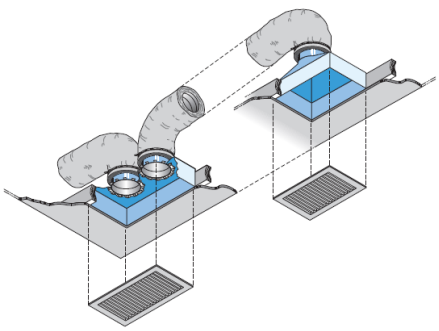

*Jumper ducts can bring air from a restricted area of the home back to a main return register.*

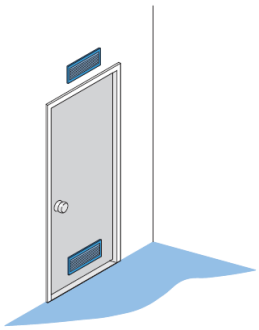

*Installing grills in doors or through walls allows return air to escape from bedrooms*

**Restricted return air:** Return air is often restricted, requiring a variety of strategies to relieve the resulting house pressures and low system airflow. Installing an additional return duct directly into the air handler is a preferred strategy.

#### 3.10.12.3.3 New Ducts

New ducts should not be installed in unconditioned spaces unless absolutely necessary. If ducts are located in unconditioned spaces, joints should be sealed and the ducts insulated as described previously.

New ducts must be physically connected to the existing distribution system or to the furnace. Install balancing damper in each new branch duct. Registers should terminate each new supply or return branch duct.

### 3.10.13 Heating-System Replacement Specifications

Replacements should only be considered if repairs are impractical or expensive or if a replacement shows a savings to investment ratio (SIR) of 1.0 or better as modeled by NEAT, HEAT or another approved audit tool. Replacement should not be considered if the existing furnace falls outside of the WAP parameters for health, safety and efficiency.

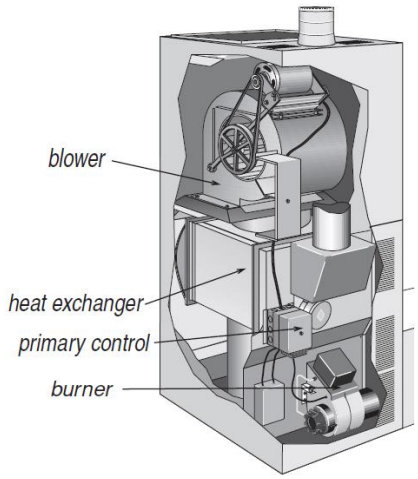


**Oil-fired downflow furnaces:** Their design hasn't changed much in recent years except for the flame-retention burner.

New heating appliances must be installed to manufacturer's specifications, following all applicable building and fire codes. Replacement gas furnaces should have a minimum Annual Fuel Utilization Efficiency (AFUE) of 90%. These high-efficiency furnaces are direct-vent, sealed-combustion units with health and safety benefits in addition to their superior efficiency and significantly lower fuel usage. Boilers and oil-fired units must have a minimum AFUE of 82%.

Heat load calculations, used to size the new heater, must account for reduced heating loads, resulting from insulation and air sealing work. Heat load calculations should follow Manual J procedures.

Specifications are presented here first according to fuel-type— oil or gas—then by distribution type: forced air, hot water, or steam.

#### 3.10.13.1 Furnace Replacement

The overall goal of furnace replacement, where such replacement meets the requirements in Section 3.10.33.10.3, is to provide a forced-air heating system in virtually new condition, even though existing supply and return ducts may remain. Any design flaws in the duct system and registers should be diagnosed and corrected during the furnace replacement.
Furnace should be sized to the approximate heating load of the home, accounting for post-weatherization heat-loss reductions.

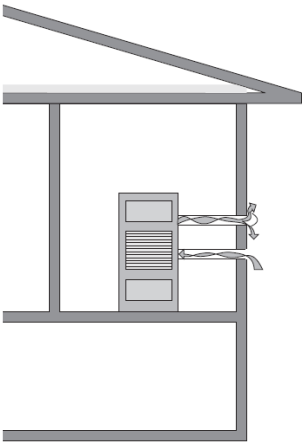

**Sealed combustion heaters:** Sealed combustion furnaces and boilers prevent the air pollution and house depressurization caused by some open-combustion heating units.

- Installer should add return ducts or supply ducts as part of furnace replacement to improve air distribution, to eliminate duct-induced house pressures, and to establish acceptable values for static pressure and heat rise.
- Supply and return plenums should be mechanically fastened with screws and sealed to air handler with mastic and fabric mesh tape to form an essentially airtight
- All ducts should be sealed in accordance with the 2012 IECC for climate zone 4
- Heat rise (supply temperature minus return temperature) must be within manufacturer's specifications or no higher
- High limit should stop fuel flow within 10% of 200° F. Furnace must not cycle on high limit.

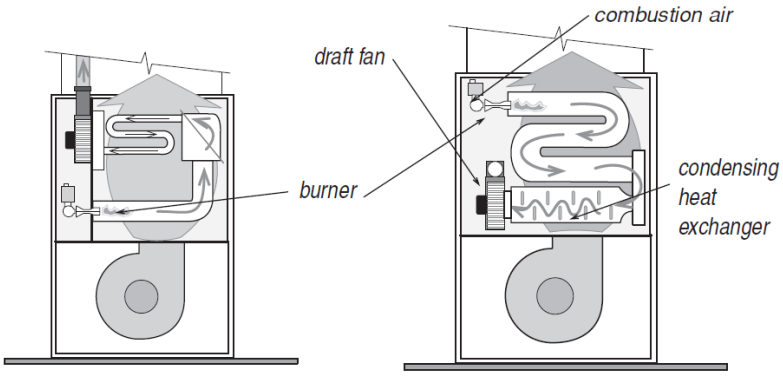


**80+ gas furnace:** An 80+ furnace has a restrictive heat exchanger, a draft fan, and has no draft diverter or standing pilot.

**90+ gas furnace:** A 90+ furnace has a condensing heat exchanger and a stronger draft fan for pulling combustion gases through its more restrictive heat exchange system and establishing a strong positive draft.

- Fan control should be set to activate fan at no less than 120° F and deactivate it at 90° to 100° F. Slightly higher settings are acceptable if these recommended settings cause a comfort complaint.
- Static pressure, measured in both supply and return plenums should be within manufacturer's specifications.
- Blower should not be set to operate continuously.
- Seal holes through the jacket of the air handler with mastic or foil tape.
- Filters should be held firmly in place and provide complete coverage of blower intake or return register. Filters should be easy to replace.

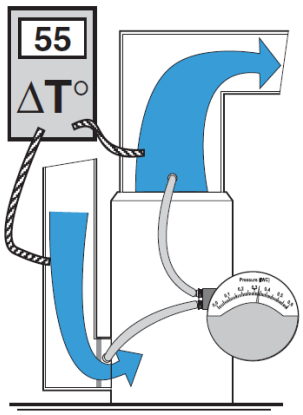


**Static pressure and temperature rise:** Testing static pressure and temperature rise across the new furnace should verify that the duct system isn't restricted. The correct airflow, specified by the manufacturer, is necessary for high efficiency.

### 3.10.13.2 Oil-Fired Heating Installation

The overall goal of the system replacement is to provide an oil-fired heating system in virtually new condition, even though components like the oil tank, chimney, piping, or ducts may remain. Any maintenance or repair on these remaining components should be considered part of the job and meet the standards for replacement in Section 3.10.3. Any design flaws related to the original system should be diagnosed and corrected during the heating-system replacement.

- Examine existing chimney and vent connector for suitability as venting for new appliance. The vent connector may need to be re-sized and the chimney may need to be relined.

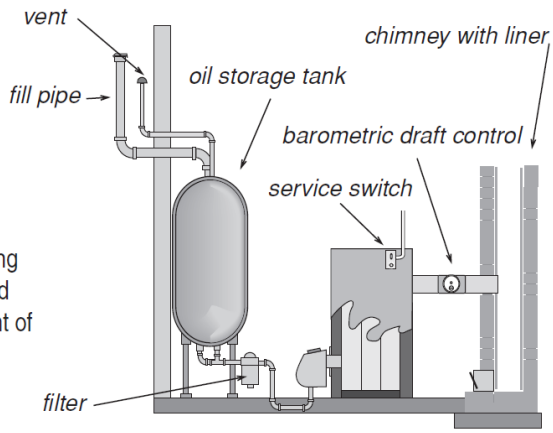


**Oil heating system:**
Components of an oil heating system may need repair and cleaning during replacement of the furnace or boiler.

- Check clearances of heating unit and its vent connector to nearby combustibles, by referring to NFPA 31.
- Check for the presence of a control that will interrupt power to the burner in the event of a fire.
- Test oil pressure to verify compliance with manufacturer's specifications.
- Test transformer voltage to verify compliance with manufacturer's specifications.
- Test control circuit amperage, and adjust thermostat heat anticipator to match.
- Adjust oxygen, flue-gas temperature, and smoke number to match manufacturer's specifications.
- Install new fuel filter and purge fuel lines as part of new installation.
- Bring tank and oil lines into compliance with NFPA 31, Chapters 2 and 3.
- Check for emergency shut-off, installed in the living space.

#### 3.10.13.3 Gas-Fired Heating Installation

The overall goal of the system replacement is to provide a gas-fired heating system in virtually new condition, even though existing components like the gas lines, chimney, water piping, or ducts may remain. Any necessary maintenance or repair on these remaining components should be considered part of the installation. Any design flaws in the original system should be diagnosed and corrected during the heating-system replacement.
The new furnace should have an Annual Fuel Utilization Efficiency (AFUE) of at least 80% and have a draft-assisting fan, electronic ignition, and no draft diverter. However, a sealed-combustion, condensing furnace with an AFUE of at least 90% is strongly recommended.

- Check clearances of heating unit and its vent connector to nearby combustibles, according to the International Fuel Gas Code (IFGC).
- Clock gas meter to insure correct gas input. If necessary, measure gas pressure, and increase or decrease gas pressure to obtain proper gas input.
- Test gas water heater to insure that it vents properly after installation of a sealed-combustion, 90+ AFUE furnace. If necessary install a power vent, reline chimney, move or replace water heater to ensure proper venting.
- Set thermostat's heat anticipator to the amperage measured in the control circuit, or follow thermostat manufacturer's instructions for adjusting cycle length.
- Follow manufacturer's venting instructions along with the IFGC to establish a proper venting system
- Ensure proper sediment trap on gas line.

#### 3.10.13.3.1 Combustion Standards for Gas-Burning Furnaces

***Combustion Standards for Gas-Burning Furnaces***

| Gas Combustion Performance Indicator | 80+ Furnace | 90+ Furnace |
|---|---|---|
| Oxygen (% $O_2$) | 4–9% | 4–9% |
| Stack temperature (°F) | 325°–450° | 90°–120° |
| Carbon monoxide (CO) parts per million (ppm) | ≤ 100 ppm | ≤ 100 ppm |
| Steady-state efficiency (SSE) (%) | 80–84% | 92–97% |
| Gas pressure (inches water column or IWC) | 3.2–3.9 IWC | 3.2–3.9 IWC |
| Supply temperature (°F) | 120–140° | 95–140° |

### 3.10.13.4 Electric-Furnaces and Electric Baseboard Heat

The purpose of servicing electric furnaces and electric baseboard heat is to clean the heat exchangers and blower. Sealing ducts is also very important because electric heat is so expensive.

- Check and clean thermostat.
- Clean and lubricate blower if appropriate.
- Clean or replace all filters.
- Vacuum and clean housing around electric elements, if dirty.
- Clean fins on electric-baseboard systems, if applicable.
- Take extra care in duct sealing and duct airflow improvements for electric furnaces because of the high cost of electricity
- Verify that safety limits, heat rise, and static pressure conform to manufacturer's specifications.

#### 3.10.13.4.1 Hot-Water and Steam Standards

The following standards refer to hot-water and steam systems commonly found in single-family homes. Hot-water and steam systems found in multifamily buildings are generally more complex and should be tested and evaluated by professionals experienced in their operation.

### 3.10.13.5 Boiler Efficiency and Maintenance

Boilers can maintain good performance and efficiency for many years if they are regularly maintained and tuned-up. Boiler performance and efficiency improve after effective maintenance and tune-up procedures. There are more ways for performance and efficiency to deteriorate in boilers compared to furnaces. Specifically these are:

- Corrosion, scaling, and dirt on the water side of the heat exchanger.

- Corrosion, dust, and dirt on the fire side of the heat exchanger.
- Off-cycle air circulation through the firebox and heat exchanger, removing heat from stored water.
- Excess air during combustion from air leaks and incorrect fuel-air mixture.
- Consider the following maintenance and efficiency improvements for both hot-water and steam boilers.
- Check for leaks on the boiler, around its fittings, or on any of the distribution piping connected to the boiler.
- Clean fire side of heat exchanger of noticeable dirt.
- Check doors and cleanout covers for air leakage. Replace gaskets or replace warped doors or warped cleanout covers.
- Drain water from the boiler drain until the water flows clean.

#### 3.10.13.6 Forced Hot Water Space-Heating

Hot-water heating is generally a little more efficient than forced-air heating and considerably more efficient than steam heating. The most significant energy problems in hot-water systems are poor steady-state efficiency, off-cycle flue losses robbing heat from stored water, and boilers operating at too high a water temperature.

Consider the following safety checks and improvements:

- Confirm the existence of a 30-psi-rated pressure-relief valve. Replace a malfunctioning valve or add one if none exists. Note signs of leakage or discharges, and find out why the relief valve is discharging.

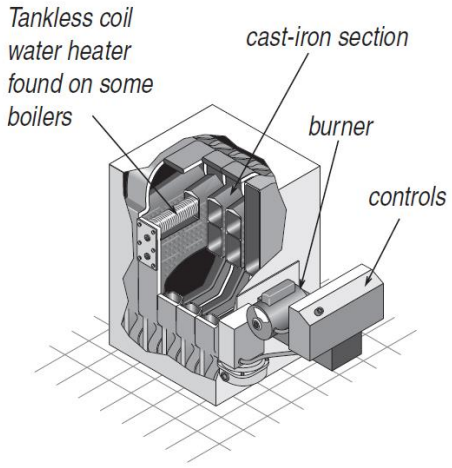


**Cast-iron sectional boilers:** The most common boiler type for residential applications.

**Note:** You can recognize a hot-water boiler by its pressure tank, located somewhere above the boiler. This cylindrical tank provides an air cushion to allow the system's water to expand and contract as it is heated and cooled without discharging through the relief valve.

- Make sure that the pressure tank isn't waterlogged or sized too small for the system. This could cause the pressure-relief valve to discharge. Test pressure tank for its rated air pressure—often 15 psi.
- If rust is observed in venting, verify that return water temperature is above 130° F for gas and above 150° F for oil, to prevent acidic condensation.
- High-limit control should deactivate burner between 180° 200° F.
- Lubricate circulator pump(s) if necessary.
- Consider the following efficiency improvements.
- Repair water leaks in the system.
- Boiler should not have low-limit control for maintaining a minimum boiler-water temperature, unless the boiler is heating domestic water in addition to space heating.
- Bleed air from radiators and piping through air vents on piping or radiators. Most systems have an automatic fill valve. If there is a manual fill valve for refilling system with water, it should be open to push water in and air out, during air purging.
- Consider installing a two-stage thermostat or timer control to increase circulator on-time compared to burner on-time.

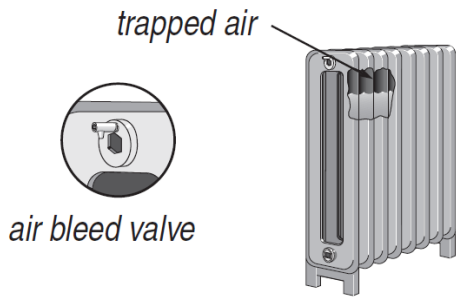


**Purging air:** Trapped air collects at the hot-water system's highest parts. Bleeding air from radiators fills the radiator and gives it more heating surface area.

- Consider installing outdoor reset controllers on larger boilers to regulate water temperature, depending on outdoor temperature.
- After control improvements like two-stage thermostats or reset controllers, verify that return water temperature is high enough to prevent condensation and corrosion in the chimney as noted previously.
- Vacuum and clean fins of fin-tube convectors if you notice dust and dirt there.
- Insulate all supply piping, passing through unheated areas, with foam pipe insulation, at least one-inch thick, rated for temperatures up to 200° F.
- Consider installing electric vent dampers on atmospheric gas- and oil-fired high-mass boilers.

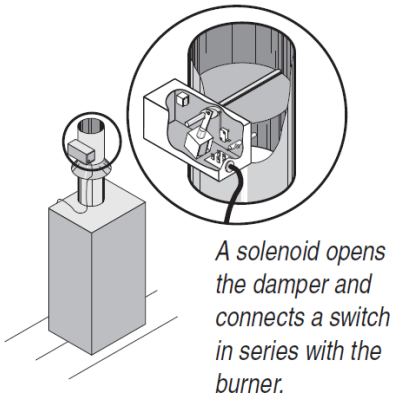


**Vent dampers:** Electric vent dampers close the chimney when the burner isn't firing, preventing circulating air from carrying the boiler's stored heat up the chimney.

### 3.10.13.7 Steam Heating

Steam heating is less efficient than hot-water heating because higher temperature heating systems are less efficient than lower temperature ones. A steam boiler heats water to its boiling point before making steam or accomplishing any space heating. Steam boilers are also more hazardous because of the steam pressure. For these reasons heating-system replacement with a hot-water or forced-air system should be considered, depending on the boiler's operating efficiency after a tune-up.

**Note:** You can recognize a steam boiler by its sight glass, which will indicate the boiler's water level. Notice that the water doesn't completely fill the boiler, but instead allows a space for the steam to form above the boiler's water.

If the steam-heating system must remain, operate it at the lowest steam pressure that will heat the building. This may be considerably less than 1 psi on the boiler-pressure gauge. Large buildings may need higher steam pressures, but smaller ones can operate at small steam pressure. Traps and air vents are crucial to operating at a low steam pressure. Electric vent dampers will reduce off-cycle losses for both gas- and oil-fired systems.

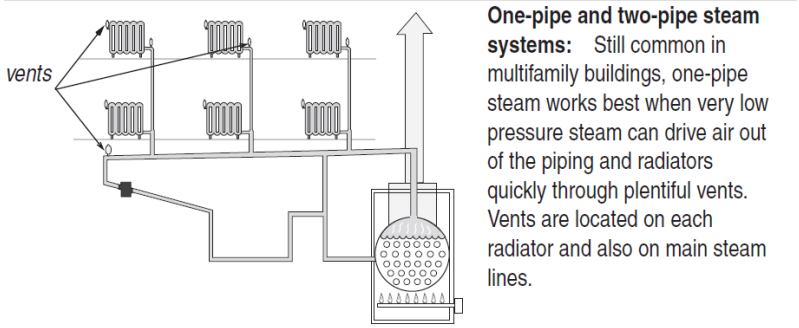


**One-pipe and two-pipe steam systems:** Still common in multifamily buildings, one-pipe steam works best when very low pressure steam can drive air out of the piping and radiators quickly through plentiful vents. Vents are located on each radiator and also on main steam lines.

**Two-pipe steam systems:** Radiator traps keep steam inside radiators until it condenses. No steam should be present at the condensate tank.

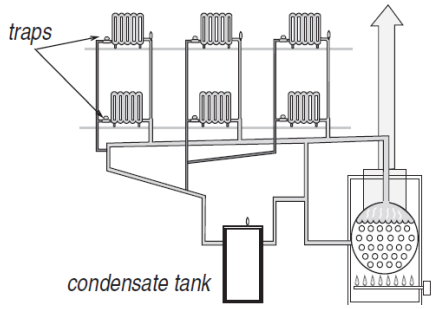


Perform the following for safety and maintenance checks on steam systems:

- Verify that steam boilers are equipped with high-pressure limits and low-water cut-off controls.
- Verify that flush valves on low water cutoffs are operable and do not leak.
- On steam boilers with externally mounted low water cutoffs, verify the function of the control by flushing the low water cutoff with the burner operating. Combustion must cease when the water level in the boiler drops below the level of the float.
- Drain water out of blow-down valve until water runs clear.
- Check with owner about chemicals added to boiler water to prevent corrosion and mineral deposits. Add chemicals if necessary.
- Ask owner about instituting a schedule of blow-down and chemical-level checks.
- Consider the following efficiency checks and improvements for steam systems.
- Verify that high-pressure limit control is set at or below 1 (one) psi.
- Verify steam vents are operable and that all steam radiators receive steam during every cycle. Unplug vents as necessary. Add vents to steam lines and radiators as needed to achieve this goal.
- Check steam traps with a digital thermometer or listening device to detect any steam escaping from radiators through the condensate return. Replace leaking steam traps or their thermostatic elements.
- Repair leaks on the steam supply piping or on condensate return piping.
- Consider a flame-retention burner and electric vent damper as retrofits for steam boilers.
- Clean fire side of heat exchanger of noticeable dirt.
- All steam piping, passing through unconditioned areas, should be insulated to at least R-3 with fiberglass or specially designed foam pipe insulation rated for steam piping.

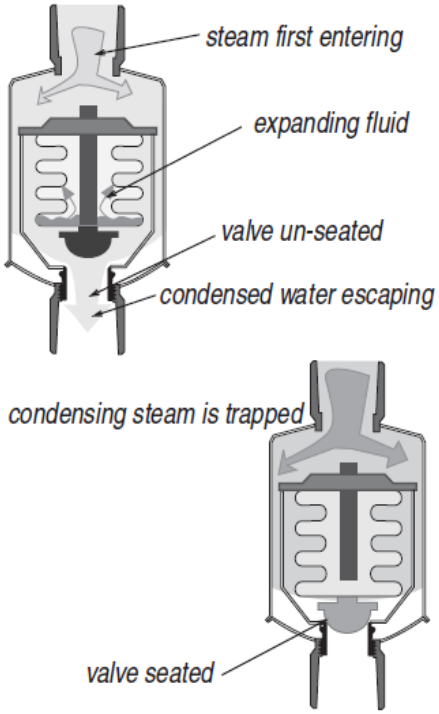


**Steam traps:** Steam enters the steam trap heating its element and expanding the fluid inside. The expanded element plugs the steam's escape with a valve.

#### 3.10.13.8 Boiler Replacement

Don't assume that a boiler replacement will save much energy unless the boiler's steady-state efficiency can't be raised to around 80%. The overall goal of boiler replacement is to provide a hydronic heating system in virtually new condition, even though existing supply and return piping may remain. Any design flaws in the venting, piping, and controls should be diagnosed and corrected during the boiler replacement.

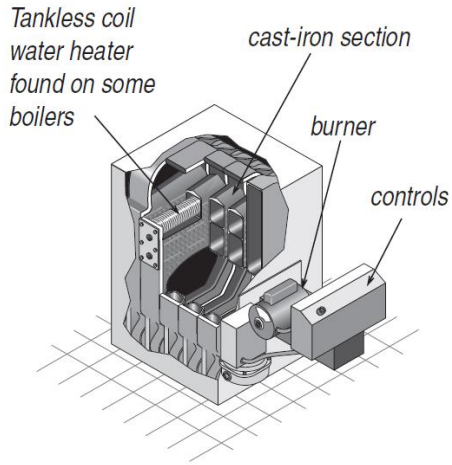


**Cast-iron sectional boilers:** Are the most common boilers for residential applications.

Boiler piping and controls present many options for zoning, boiler staging, and energy-saving controls. Dividing homes or multifamily buildings into zones, with separate thermostats, can significantly improve energy efficiency over operating a single zone. Modern hydronic controls can provide different water temperatures to different zones with varying heating loads.

The new boiler should have an AFUE of at least 80%. The new boiler should be equipped with electronic ignition and a draft-assisting or power-draft fan. It should not have a draft diverter.

Boiler seasonal efficiency is more sensitive to proper sizing than is furnace efficiency. A boiler must be properly sized using Manual J calculations when weatherization work is performed in the home. Consider the following specifications when replacing boilers.

- Inspect chimney for deterioration and correct sizing. Repair and re-line the chimney as necessary.
- An effective air-excluding device or devices must be part of the new hydronic systems.

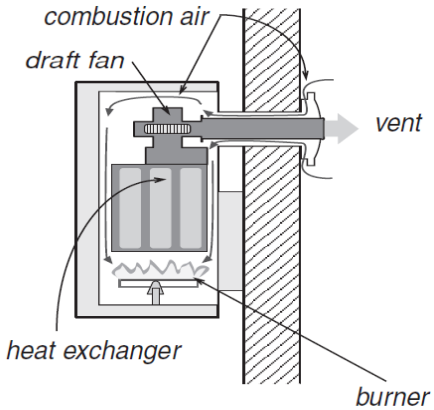


**Wall-hung boiler:** Energy-efficient wall-hung boilers require less space of standard boilers.

- Install the pump near the downstream side of the pressure tank to prevent the suction side of the pump from depressurizing the piping, which can pull air into the piping.
- The pressure tank should be replaced, unless it is verified to be the proper size for the new system and tested for correct pressure during boiler installation.
- Verify that return water temperature is above 130° F for gas and above 150° F for oil, to prevent acidic condensation within the boiler, unless the boiler is designed for condensing. Install piping bypasses, mixing valves, primary-secondary piping, or other strategies, as necessary, to prevent condensation within a non-condensing boiler.
- Recognize the boiler installation's potential for causing condensation in the vent connector and chimney. If the boiler's steady-state efficiency is expected to be more than83%, condensation-resistant venting and condensation drains should be designed into the venting system. These custom venting systems are provided or specified by the manufacturer.
- A pressure-relief valve must be installed with the new boiler and connected to a drain pipe, draining into a floor drain.

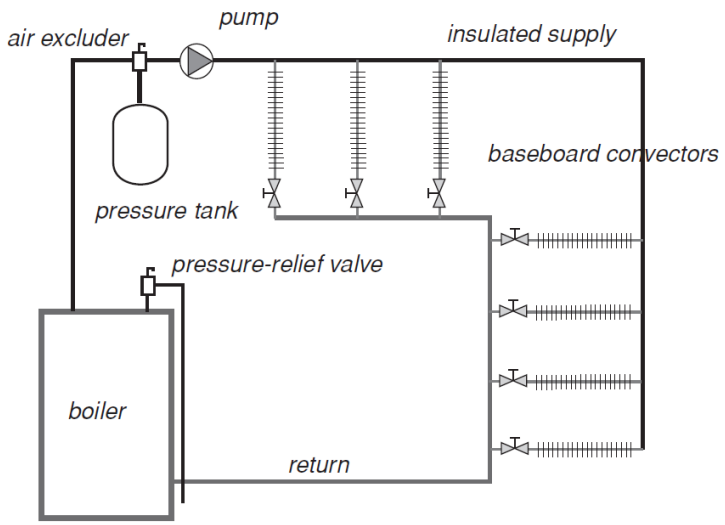


**Simple reverse-return hot-water system:** The reverse-return method of piping is the simplest way of balancing flow among heat emitters.

- Maintaining a low-limit boiler-water temperature is wasteful. Boilers should be controlled for a cold start, unless the boiler is used for domestic water heating.
- Insulate all supply piping, outside conditioned spaces, with foam or fiberglass pipe insulation.
- Extend new piping and radiators to conditioned areas like additions and finished basements, currently heated by space heaters.
- For large boilers, consider installing outdoor reset controllers to adjust supply water temperature according to outdoor temperature.
- For large boilers, consider installing a cutout controller that prevents the boiler from firing when the outdoor temperature is above a certain set point where heat is not needed.

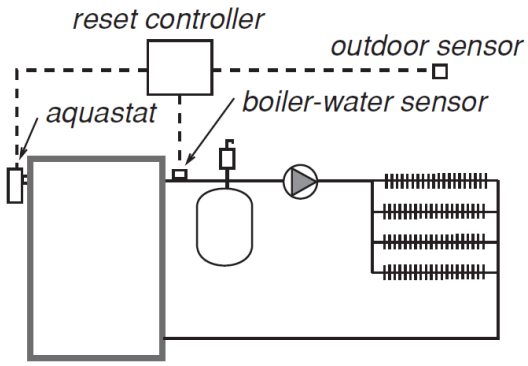


**Reset controller:** The circulating water is controlled by the reset controller according to the outdoor temperature.

## 3.11 CHANGE ORDERS

A change order is generated when there is an omission on the original Work Order, a required change from the original Work Order, or unforeseen items arise that need to be included as part of the weatherization services. A change order can be initiated by the Crew Leader or Energy Auditor. In all circumstances, documentation of the Subgrantee approval must be received prior to the installation of change order items (text messages, digital photos, or email). The Subgrantee may require photo documentation or product specifications for making change order determinations.

## 3.12 FINAL INSPECTION REQUIREMENTS

The Final Inspection will be conducted in accordance with the Department of Energy Home Energy Professional Quality Control Inspector standards. Quality Control Inspection by a certified person must be conducted to adhere to federal compliance. A final inspection will include a visual examination of materials installed and workmanship quality of all items on the Work Order. In addition, the inspection will verify that all work was completed in accordance with the Delaware Standard Work Specifications. The Inspector will perform all necessary technical testing to assess the effectiveness and safety of the work.

The Final Inspector will inspect the completed work and have the client sign a completion verification form. This verification will become part of the permanent client file record. Also included in the final inspection report is an assurance that installed measures were explained to the client and that client education was provided. The inspector must then sign the final inspection report form and submit it promptly to the Subgrantee indicating that the unit has passed. In the event the unit does not pass the final inspection, the form must note any deficiencies or reasons for failure of the inspection and another inspection must be scheduled upon completion of failed items.

# 4. APPENDIX A

**Appendix A**
**List of Acronyms**

| | |
|---|---|
| ACM | Asbestos-Containing Material |
| ACH | Air Changes per Hour |
| AGA | American Gas Association |
| AHERA | Asbestos Hazard Emergency Response Act |
| AAR | Annual Administrative Review |
| BPI | Building Performance Institute |
| BTU | British Thermal Unit |
| CFM | Cubic Feet Per Minute |
| $CFM_{50}$ | Cubic Feet Per Minute at 50 Pascals |
| CAP | Community Action Program |
| CFR | Code of Federal Regulations |
| CO | Carbon Monoxide |
| CO2 | Carbon Dioxide |
| CAZ | Combustion Appliance Zone |
| CFL | Compact Florescent Light |
| CPSF | Certified Professional Service Firm |
| CT&E | Clean, Tune & Evaluate |
| DNREC | Department of Natural Resource and Environmental Control |
| DOE | Department of Energy |
| DEC | Division of Energy & Climate |
| DHSS | Department of Health & Social Services |
| DEAP | Delaware Energy Assistance Program |
| EPA | Environmental Protection Agency |
| ECM | Energy Conservation Measure |
| GFCI | Ground Fault Circuit Interrupter |
| H&S | Health & Safety |
| HSM | Health and Safety Measure |
| HEPA | High Efficiency Particulate Air |
| HIPAA | Health Insurance Portability and Accountability Act |
| HVAC | Heating, Ventilation & Air Conditioning |
| IC | insulated contact |
| ICAT | Insulation Contact Air Tight |
| IECC | International Energy Conservation Code |
| IWC | Inches of Water Column |
| ITB | Invitation to Bid |
| IRM | Incidental Repair Measure |
| Lf | Linear Feet |
| LIHEAP | Low Income Energy Assistance Program |
| MHEA | Manufactured Home Energy Audit |
| MSHA | Mine Safety and Health Administration |
| NFPA | National Fire Protection Association |
| NEAT | National Energy Audit |
| NID | Negotiated Instrument Definition |
| NHPA | National Historic Preservation Act of 1966 |
| NIOSH | National Institute of Occupational Safety and Health |
| O2 | Oxygen |

| | |
|---|---|
| OMB | Office of Management & Budget |
| OSB | Oriented Strand Board |
| OSHA | Occupational Safety & Health Administration |
| Pa | Pascal |
| PU | Program Update |
| PPE | Personal Protection Equipment |
| PPM | Parts Per Million |
| PVC | Polyvinyl chloride |
| PY | Program Year |
| QCI | Quality Control Inspector |
| RGGI | Regional Greenhouse Gas Initiative |
| RFP | Request for Proposal |
| RRP | Renovation, Repair, and Painting |
| SDS | Safety Data Sheets |
| SF | Square Feet |
| SWS | Standard Work Specification |
| SIR | Savings to Investment Ratio |
| SHPO | State Historical Preservation Office |
| T&TA | Training & Technical Assistance |
| VOC | Volatile Organic Compound |
| WAP | Weatherization Assistance Program |
| WPN | Weatherization Program Notice |

# 5. APPENDIX B

**Delaware Weatherization Assistance Program**
**Client Health and Safety Survey**

Client Name:_____

Address:_____County_____

Phone #:_____ (home) _____(cell/other)

The Delaware Weatherization Assistance Program (WAP) assists low income homeowners and individuals ("Clients") with making their homes more energy efficient, thereby increasing their comfort and saving money on energy bills. In the process, we work to ensure their health and safety to the best of our ability.

As a client in the Delaware WAP, I understand that my health and safety, and that of the WAP staff and contractors is a critical component of the Delaware WAP and that any and all weatherization activities, retrofit materials, techniques or practices will be conducted to minimize any health and safety concerns and environmental impacts.

**Part 1 – to be completed at client eligibility intake**

To provide safe and effective services, it's necessary to have a sense of the client's health, and knowledge of any health concerns you have with your home. Therefore, please check the appropriate boxes below and inform the auditor or intake worker with any health concerns you may have with weatherizing your home.

- ☐ Chronic allergies_____
- ☐ Breathing problems (COPD, Emphysema, etc...) _____
- ☐ High blood lead levels_____
- ☐ Wheelchair accessibility needs_____
- ☐ Mold or other safety concerns in the home_____
- ☐ Moisture problems (please be room specific)_____
- ☐ Other concerns_____

**Part 2 (see reverse side) – to be completed by the auditor**

At the beginning of the energy audit, the auditor should perform an initial assessment of the home for health and safety concerns, as well as overall energy conservation opportunities and any causes for deferral of the unit. Health and safety issues may or may not be reason for deferral of the home, the decision of which is made by the auditor during their initial assessment.

A checklist for use by the auditor is shown on the reverse of this page. The auditor should fill it out noting any and all health and safety concerns observed. In addition, the auditor should discuss his or her findings with the homeowner or renter to ensure they understand the findings and can make any corrective actions necessary. If the conditions in the home are such that deferral is needed, the homeowner will be provided the reasons for deferral on a separate notification form. The client must sign this form, which must then be entered in the client's file. Client refusal to sign should be noted and signed off on by the local agency program manager.

# 6. APPENDIX D

CATHOLIC CHARITIES
Diocese of Wilmington

Delaware Division of ENERGY & CLIMATE

Weatherization Assistance Program

## WEATHERIZATION ASSISTANCE PROGRAM – PROGRAM DEFERRAL NOTIFICATION

| | | | |
|---|---|---|---|
| Client Number: | | | |
| Client Name: | | | |
| Address: | | County: | |
| Phone #: | | | |

DEFERRAL REASON: (CHECK ALL THAT APPLY)

_____ Structurally unsound dwelling

_____ Evidence of substantial, persistent infestations of rodents, insects, and other vermin

_____ Electrical or plumbing hazards that cannot be resolved prior to, or as a part of, weatherization services

_____ Environmental hazards such as serious moisture problems, suspected mold, carbon monoxide, gas leaks, friable asbestos, or other hazardous materials

_____ Presence of sewage in any part of the dwelling unit, basement, or crawlspace

_____ Presence of animal feces in any area of the dwelling unit where program staff must perform weatherization measures

_____ Excessive garbage buildup in and around dwelling unit which limits the program staff access to dwelling and encourages rodent infestations

_____ Areas of the home are inaccessible due to clutter, belongings, furnishings or other items blocking or preventing access for weatherization

_____ An overt threat of violence to any program staff member or any household member during weatherization process

_____ Major Remodeling in Progress – limits proper completion of weatherization measures

_____ Excessive moisture or standing water in crawl space or basement

_____ Uncooperative client: refuses major weatherization measure or refuses to make modifications necessary to permit major measure to be completed

_____ Client no longer interested in the program

_____ The expected need for incidental repairs to protect weatherization measures will exceed $400.

_____ Presence or use of any controlled substance in the dwelling during the weatherization process

_____ The following other reason(s) for deferral:

| |
|---|
| |

**Auditor/Installer Signature**_____ DATE_____

Auditor Installer name and company (Please print) _____

---

**RE AUDIT FINDINGS**

_____ All checked items above have been cleared and unit can begin weatherization.

_____ Deferral items not corrected. Unit deferred.

**Auditor Signature**_____ DATE_____

# 7. APPENDIX F

## BASE FUNDED WEATHERIZATION PRIORITY LIST
### DELAWARE SINGLE–FAMILY HOMES

**All of the measures below are to be installed in accordance with the Weatherization Field Manual. The measures should be installed in the sequence listed. Agencies may not skip measures. If a Priority item is not completed, written documentation is required. All HVAC system and complete duct system replacements require NEAT SIR justification. Homes with mechanical efficiencies less than 80 AFUE/10 SEER are recommended for NEAT audit. Homes with Electric Furnaces are strong candidates for Heat Pump Replacements and are recommended for an individual audit. Any items that are not on the Priority list require an individual audit.**

**The following General Heat Waste measures may be installed in all homes:**
- ✓ **DHW Pipe Insulation (up to 6 feet on both lines)**
- ✓ **DHW Tank Insulation (unconditioned spaces only)**
- ✓ **Low-flow Showerheads**
- ✓ **Faucet Aerators**
- ✓ **Furnace Filters**
- ✓ **Minor Air Sealing for Comfort**

## *Health and Safety Activities*

**To be completed in all homes:**
- Diagnostic Testing
- Primary Heating System—Repair or Replace with a minimum 80 AFUE system if unit is unsafe based on HVAC evaluation.
- Repair/Replace Gas Water Heater (CAS Failure only)
- Repair/Replace Gas Cooking Appliances (CAS Failure only). **(Replacement is not allowable with DOE or ARRA funds, repairs are allowable or other funds should be used for this measure when possible)**
- Replace damper and/or exhaust fan when inoperable
- CO Alarms (Maximum 1 per floor)

**In addition to the above, install the following measures:**

## *Single Family Homes*

**Programmable Thermostat**
- Except for homes with existing heat pumps
- Measure can be skipped if client cannot operate properly
- Installed cost not to exceed $85

**CFLs** (10 Maximum)
- If existing lighting is incandescent and in use for 2 hours per day or more

**Air Sealing**

| Primary Heating Type | Maximum Cost per 100 CFM50 Reduction |
|---|---|
| Natural Gas | $100 |
| Electric Furnace | $100 |
| Propane | $100 |
| Oil | $100 |
| Heat Pump | $100 |

### Attic Insulation

- Post-Weatherization Attic Insulation R-Values:

| Existing Attic Insulation Level | Space Heating Fuel | | | | |
|---|---|---|---|---|---|
| | Propane | Electric Resistance & Electric Furnace | Oil | Electric Heat Pump | Natural Gas |
| **R0 - R19** | R-49 | R-49 | R-49 | R-49 | R-49 |
| **R20 - R25** | R-49 | R-49 | Add R-11 | | |
| **R26 - R30** | R-49 | R-49 | | | |

- Air seal and insulate kneewalls with R-13 batt (If applicable)

**Duct Sealing and Insulation**

- For exposed ducts in unconditioned space
- Insulate to R-8
- Maximum of $750 for duct sealing
- For exposed boiler piping in unconditioned space
- Maximum of $750 for insulation

**Sillbox Insulation**

- Air seal and insulate sillbox to R-12
- Cost not to exceed $3/SF

### Foundation Wall Insulation (If applicable)

- If no floor insulation exists
  - Install foam or rigid insulation to R-8
  - Only Insulate portion of foundation walls that are above frost line
  - Cost not to exceed $2.75/SF
- If foundation wall is absent or degraded, install floor insulation to R-19 and insulate all water pipes
  - Cost not to exceed $1.60/SF

**Sidewall Insulation**

- Dense-pack uninsulated sidewalls to R-13 with cellulose

**Install Heat Pump Water Heater**

- If there is an existing electric water heater
- Cost not to exceed $1,750
- EF ≥ 2.4
- 3 or more occupants required

**Storm Windows**

- Propane and Electric Furnace heating only
- Cost must not exceed $9/SF.

**Refrigerators**

- Estimate annual electricity consumption by metering or locate usage in a database
  - See www.waptac.org/sp.asp?id=70
- Cost must include delivery and installation of the new refrigerator, and removal and environmentally responsible de-manufacturing of the old unit.
- Cost for replacement is limited per the table below:

| Existing Refrigerator Annual Consumption (kWh/yr) | Replacement Refrigerator Annual Consumption (kWh/yr) | | | | |
|---|---|---|---|---|---|
| | 300 | 400 | 500 | 600 | 700 |
| **800** | $672 | $538 | $403 | $269 | $134 |
| **900** | $807 | $672 | $538 | $403 | $269 |
| **1000** | $941 | $807 | $672 | $538 | $403 |
| **1100** | $1,075 | $941 | $807 | $672 | $538 |
| **1200** | $1,210 | $1,075 | $941 | $807 | $672 |
| **1300** | $1,344 | $1,210 | $1,075 | $941 | $807 |
| **1400** | $1,479 | $1,344 | $1,210 | $1,075 | $941 |
| **1500** | $1,613 | $1,479 | $1,344 | $1,210 | $1,075 |

# BASE FUNDED WEATHERIZATION PRIORITY LIST

## DELAWARE MOBILE HOMES

**All of the measures below are to be installed in accordance with the Weatherization Field Manual. The measures should be installed in the sequence listed. If a Priority item is not completed, written documentation is required. All HVAC system and complete duct system replacements require MHEA SIR justification. Homes with mechanical efficiencies less than 80 AFUE/10 SEER are recommended for MHEA audit. Homes with Electric Furnaces are strong candidates for Heat Pump Replacements and are recommended for an individual audit. Any items that are not on the Priority list require an individual audit.**

**The following General Heat Waste measures may be installed in all homes:**

- ✓ **DHW Pipe Insulation (up to 6 feet on both lines)**
- ✓ **DHW Tank Insulation (unconditioned spaces only)**
- ✓ **Low-flow Showerheads**
- ✓ **Faucet Aerators**
- ✓ **Furnace Filters**
- ✓ **Minor Air Sealing for Comfort**

## *Health and Safety Activities*

**To be completed in all homes:**

- Diagnostic Testing
- Primary Heating System—Repair or Replace with a minimum 80 AFUE system if unit is unsafe based on HVAC evaluation.
- Repair/Replace Gas Water Heater (CAS Failure only)
- Repair/Replace Gas Cooking Appliances (CAS Failure only). **(Replacement is not allowable with DOE or ARRA funds, repairs are allowable or other funds should be used for this measure when possible)**
- Replace damper and/or exhaust fan when inoperable
- CO Alarms (Maximum 1 per floor)

**In addition to the above, install the following measures:**

## *Mobile Homes*

### Programmable Thermostat

- Not for homes with existing heat pumps
- Measure can be skipped if client cannot operate properly
- Installed cost not to exceed $85

**CFLs** (5 Maximum)

- If existing lighting is incandescent and in use for 2 hours per day or more

## Duct Sealing

- Total cost is limited by the initial pressure pan test results and by heating type

| | Maximum Cost to Seal Ducts to Cumulative Pressure Pan Reading of 3 Pa | | | | |
|---|---|---|---|---|---|
| **Cumulative Pressure Pan Reading (Pascals)** | **Propane** | **Electric Furnace or Resistance** | **Oil** | **Electric Heat Pump** | **Natural Gas** |
| **4** | 230 | 220 | 135 | 175 | 95 |
| **4.1 - 5** | 450 | 415 | 265 | 310 | 175 |
| **5.1 - 6** | 645 | 635 | 385 | 455 | 255 |
| **6.1 - 7** | 750 | 750 | 495 | 600 | 335 |
| **7.1 - 8** | | | 585 | 725 | 405 |
| **8.1 - 9** | | | 685 | 750 | 460 |
| **9.1 - 10** | | | 750 | | 515 |
| **10.1 - 11** | | | | | 575 |
| **11.1 - 12** | | | | | 625 |
| **12.1 - 13** | | | | | 680 |
| **13.1 - 14** | | | | | 725 |
| **>=14.1** | | | | | 750 |

**Air Sealing**

| Primary Heating Type | Maximum Cost per 100 CFM50 Reduction |
|---|---|
| Electric Furnace | $100 |
| Heat Pump | $100 |
| Oil | $100 |
| Gas | $100 |
| Propane | $100 |

**Ceiling Insulation**

- Fill ceiling cavity with loose fiberglass
- Cost must not exceed $2.25/SF

**Sidewall Insulation**

- Insulate sidewalls with fiberglass batt or blown fiberglass
- Cost must not exceed $2.00/SF (batt) or $2.35/SF (loose)

**Belly Insulation**

- Fill belly cavity with loose fiberglass insulation
- Cost must not exceed $1.95/SF

**Interior Storm Windows**

- Propane, electric furnace, and heat pump heating only
- Cost must not exceed $4/SF

**Refrigerator Replacement**

- Estimate annual electricity consumption by metering or locate usage in a database
  See www.waptac.org/sp.asp?id=70
- Cost must include delivery and installation of the new refrigerator, and removal and environmentally responsible de-manufacturing of the old unit.
- Cost for replacement is limited per the table below:

| Existing Refrigerator Annual Consumption (kWh/yr) | Replacement Refrigerator Annual Consumption (kWh/yr) | | | | |
|---|---|---|---|---|---|
| | 300 | 400 | 500 | 600 | 700 |

| | | | | | |
|---|---|---|---|---|---|
| **800** | $672 | $538 | $403 | $269 | $134 |
| **900** | $807 | $672 | $538 | $403 | $269 |
| **1000** | $941 | $807 | $672 | $538 | $403 |
| **1100** | $1,075 | $941 | $807 | $672 | $538 |
| **1200** | $1,210 | $1,075 | $941 | $807 | $672 |
| **1300** | $1,344 | $1,210 | $1,075 | $941 | $807 |
| **1400** | $1,479 | $1,344 | $1,210 | $1,075 | $941 |
| **1500** | $1,613 | $1,479 | $1,344 | $1,210 | $1,075 |

# 8. APPENDIX G

**DELAWARE WEATHERIZATION ASSISTANCE PROGRAM**

**Recordkeeping Checklist for Lead Safe Weatherization (LSW) on dwelling built before 1978.**

Client Name:_____Date:_____

Address:_____County:_____

Name of Renovator/Company:_____

Location: _____interior _____exterior

Brief Description of Renovation:_____
_____
_____

Name of LSW Technician:_____

Check all that apply:

___The work performed did not involve the disturbance of painted surfaces (signature required)

___Did not exceed EPA's requirements for performing LSW practices (signature required)

___ Warning signs posted at entrance to work area.

___ Work area contained to prevent spread of dust and debris (containment areas)

___ All objects in the work area removed or covered (interiors)

___ HVAC ducts in the work area closed and covered (interiors)

___ Windows in the work area closed (interiors)

___ Windows in and within 20 feet of the work area closed (exteriors)

___ Doors in the work area closed and sealed (interiors)

___ Doors in and within 20 feet of the work area closed and sealed (exteriors)

___ Doors that must be used in the work area covered to allow passage but prevent spread of dust

___ Floors in the work area covered with taped-down plastic (interiors)

___ Ground covered by plastic extending 10 feet from work area—plastic anchored to building and weighed down by heavy objects (exteriors)

___ Vertical containment installed if property line prevents 10 feet of ground covering, or if necessary to prevent migration of dust and debris to adjacent property (exteriors)

___ Waste contained on-site and while being transported off-site.

___ Work site properly cleaned after renovation

___ All chips and debris picked up, protective sheeting misted, folded dirty side inward, and taped for removal

___ Work area surfaces and objects cleaned using HEPA vacuum and/or wet cloths or mops (interiors)

___ Performed post-renovation cleaning verification (describe results, including the number of wet and dry cloths used):_____
_____
_____
_____

___ If dust clearance testing was performed instead, attach a copy of report

___ I certify under penalty of law that the above information is true and complete.

_____
Printed Name and title

_____
Signature_